THIS DRAWING IS UNPUBLISHED. RELEASED FOR PUBLICATION -,- .
© COPYRIGHT - By - ALL RIGHTS RESERVED.

LOC	DIST
—	—

REVISIONS

P	LTR	DESCRIPTION	DATE	DWN	APVD
	C	REV PER ECO 11-015051	7-22-11	CT	DH

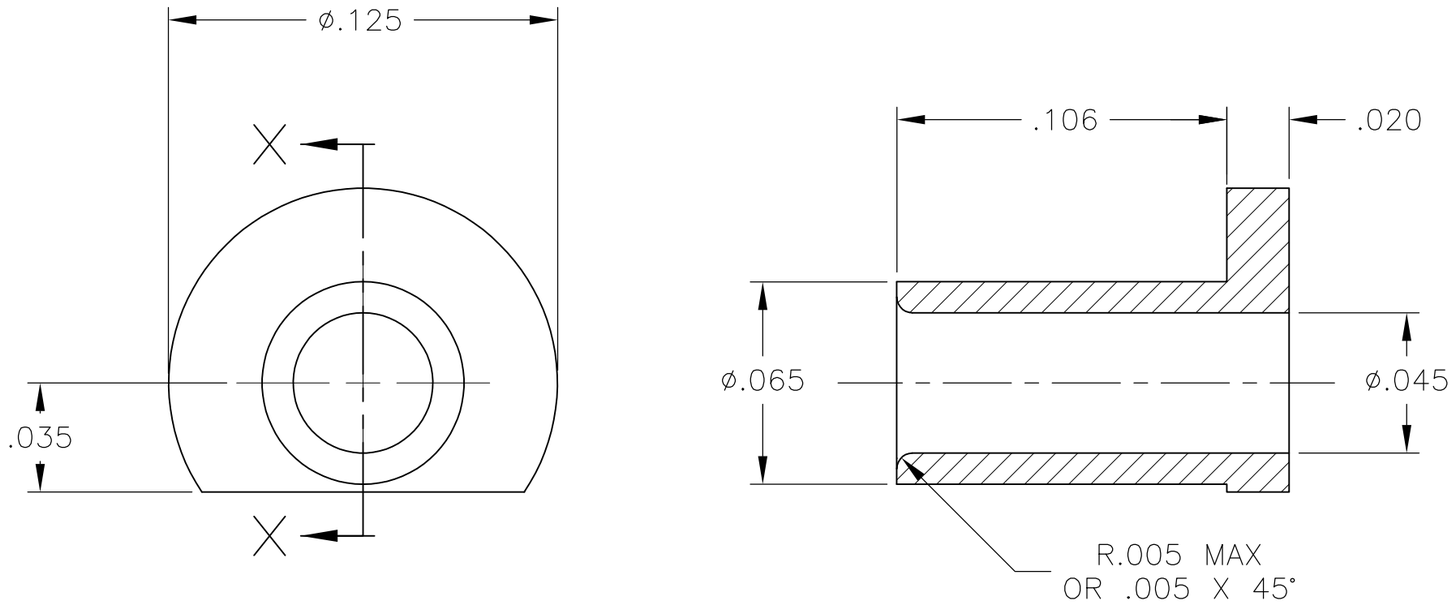

SECTION X-X

1. MATL: BRASS
2. FINISH: .000030 MIN NICKEL PLATED.

2	534164-2
1 AS SHOWN	534164-1
DESCRIPTION	PART NUMBER

THIS DRAWING IS A CONTROLLED DOCUMENT.

DIMENSIONS: INCHES

TOLERANCES UNLESS OTHERWISE SPECIFIED:

0 PLC	± -
1 PLC	± -
2 PLC	± -
3 PLC	± .005
4 PLC	± -
ANGLES	± -

MATERIAL: -

FINISH: -

DWN T. THOMPSON 01-10-95
CHK D. GUTTER 01-23-94
APVD D. GUTTER 01-23-94
PRODUCT SPEC —
APPLICATION SPEC —
WEIGHT —

TE Connectivity

NAME: KEY, RIVET, MINI-BOX PIN HEADER CONNECTOR

SIZE	CAGE CODE	DRAWING NO	RESTRICTED TO
A3	00779	C-534164	—

CUSTOMER DRAWING

SCALE 20:1 SHEET 1 OF 1 REV C

1470-19 (3/11)