molex
one company › a world of innovation

This document was generated on 08/24/2017

# PLEASE CHECK WWW.MOLEX.COM FOR LATEST PART INFORMATION

**Part Number:** 0522711469

**Status:** Active

**Overview:** FFC-FPC (SMT)

**Description:** Easy-On™ Type FFC/FPC Connector, Right-Angle, Surface Mount, ZIF, Bottom Contact Style, 14 Circuits, Gold (Au) Contact Plating, High Barrier Packaging

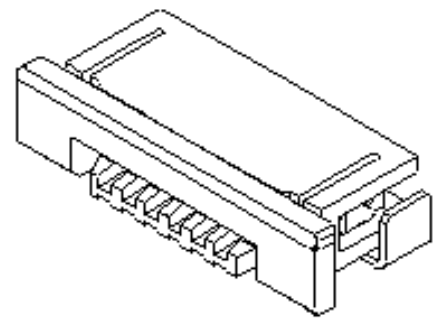

*Series image - Reference only*

**Documents:**

3D Model
Drawing (PDF)
Product Specification PS-52271-054-001 (PDF)
Application Specification AS-52271-001-001 (PDF)
Packaging Specification SPK-52271-002-001 (PDF)
RoHS Certificate of Compliance (PDF)

**Agency Certification**

| | |
|---|---|
| CSA | LR19980 |
| UL | E29179 |

**General**

| | |
|---|---|
| Product Family | FFC/FPC Connectors |
| Series | 52271 |
| Overview | FFC-FPC (SMT) |
| Product Name | Easy-On™ |
| UPC | 822350052498 |

**Physical**

| | |
|---|---|
| Circuits (Loaded) | 14 |
| Color - Resin | Natural |
| Contact Position | Bottom |
| Durability (mating cycles max) | 30 |
| Entry Angle | 90° Angle |
| Flammability | 94V-0 |
| Mated Height | 3.00mm |
| Material - Metal | Phosphor Bronze |
| Material - Plating Mating | Gold |
| Material - Plating Termination | Tin |
| Material - Resin | Nylon |
| Net Weight | 635.550/mg |
| Number of Rows | 1 |
| Orientation | Right Angle |
| PCB Locator | No |
| PCB Retention | Yes |
| Packaging Type | Embossed Tape on Reel |
| Pitch - Mating Interface | 1.00mm |
| Pitch - Termination Interface | 1.00mm |
| Polarized to PCB | Yes |
| Stackable | No |
| Temperature Range - Operating | -40°C to +85°C |
| Termination Interface: Style | Surface Mount |
| Wire/Cable Type | FFC/FPC |

**Electrical**

| | |
|---|---|
| Current - Maximum per Contact | 0.5A |
| Voltage - Maximum | 50V AC (RMS)/DC |

**Material Info**

**Reference - Drawing Numbers**

| | |
|---|---|
| Application Specification | AS-52271-001-001 |
| Packaging Specification | SPK-52271-002-001 |
| Product Specification | PS-52271-054-001 |

**EU ELV**
**Not Relevant**

**EU RoHS**
**Compliant**

**China RoHS**

**REACH SVHC**
Not Contained Per - ED/30/2017 (7 July 2017)

**Halogen-Free Status**
**Not Low-Halogen**

**Need more information on product environmental compliance?**

Email productcompliance@molex.com
Please visit the Contact Us section for any non-product compliance questions.

| | |
|---|---|
| China ROHS | Green Image |
| ELV | Not Relevant |
| RoHS Phthalates | Not Contained |

**Search Parts in this Series**
52271 Series

**Mates With**
<a href="http://www.molex.com/product/premoflex_ffc-fpc.html">Molex Premo-Flex FFC</a>. Be sure to match like plating

This document was generated on 08/24/2017

**PLEASE CHECK WWW.MOLEX.COM FOR LATEST PART INFORMATION**