molex
one company › a world of innovation

This document was generated on 08/02/2017

PLEASE CHECK WWW.MOLEX.COM FOR LATEST PART INFORMATION

Part Number: 0447641401

Status: Active

Overview: Micro-Fit 3.0 Connector System Product Family

Description: Micro-Fit BMI™ Receptacle Header, Dual Row, Right Angle, with Press-fit Plastic Pegs, 2.54µm Tin (Sn), 14 Circuits

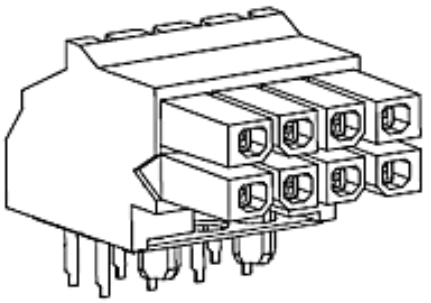

Series image - Reference only

Documents:

3D Model
Drawing (PDF)
Product Specification PS-44300-001 (PDF)
Product Specification TS-44764-001-001 (PDF)
RoHS Certificate of Compliance (PDF)
Product Literature (PDF)

Agency Certification

CSA	LR19980
UL	E29179

General

Product Family	PCB Receptacles
Series	44764
Application	Board-to-Board, Power, Wire-to-Board
Overview	Micro-Fit 3.0 Connector System Product Family
Product Literature Order No	987650-5984
Product Name	Micro-Fit BMI™
UPC	756054398616

Physical

Circuits (Loaded)	14
Circuits (maximum)	14
Durability (mating cycles max)	30
Flammability	94V-0
Glow-Wire Compliant	No
Material - Metal	Phosphor Bronze
Material - Plating Mating	Tin
Material - Plating Termination	Tin
Net Weight	3.910/g
Number of Rows	2
Orientation	Right Angle
PCB Locator	Yes
PCB Retention	Yes
PCB Thickness - Recommended	1.60mm
Packaging Type	Tray
Pitch - Mating Interface	3.00mm
Plating min - Mating	1.016µm
Plating min - Termination	1.016µm
Polarized to PCB	Yes
Surface Mount Compatible (SMC)	No
Temperature Range - Operating	-40°C to +105°C
Termination Interface: Style	Through Hole

Electrical

Current - Maximum per Contact	5.0A
Voltage - Maximum	600V

Solder Process Data

Duration at Max. Process Temperature (seconds)	005
Lead-freeProcess Capability	WAVE
Max. Cycles at Max. Process Temperature	001
Process Temperature max. C	260

EU ELV
Not Relevant

EU RoHS
Compliant

China RoHS

REACH SVHC
Not Contained Per - ED/30/2017 (7 July 2017)

Halogen-Free Status
Low-Halogen

Need more information on product environmental compliance?

Email productcompliance@molex.com
Please visit the Contact Us section for any non-product compliance questions.

China ROHS	Green Image
ELV	Not Relevant
RoHS Phthalates	Not Contained

Search Parts in this Series
44764 Series

Mates With
44428 Micro-Fit BMI™ Right Angle Headers,
44432 Micro-Fit BMI™ Vertical Headers,
44300 Micro-Fit BMI™ Plug Housing

Material Info

Reference - Drawing Numbers

Product Specification	PS-44300-001, TS-44764-001-001
Sales Drawing	SD-44764-001

This document was generated on 08/02/2017

PLEASE CHECK WWW.MOLEX.COM FOR LATEST PART INFORMATION