Plug - PP-H 6/ 1-R - 3061729

Please be informed that the data shown in this PDF Document is generated from our Online Catalog. Please find the complete data in the user's documentation. Our General Terms of Use for Downloads are valid
(http://phoenixcontact.com/download)

Plug, for self-assembly, nom. voltage: 1000 V, nominal current: 41 A, connection method: Push-in connection, number of connections: 1, number of positions: 1, cross section: 0.5 mm² - 10 mm², AWG: 20 - 8, width: 8.2 mm, height: 49.3 mm, color: gray

Your advantages

- Large-surface labeling option
- The Push-in technology COMBI plugs for self-assembly provide solutions that users can implement themselves
- Tested for railway applications

RoHS COMPLETE line

Key Commercial Data

Packing unit	1 pc
Minimum order quantity	50 pc
GTIN	4 046356 650335
GTIN	4046356650335
Weight per Piece (excluding packing)	8.000 g
Custom tariff number	85366990
Country of origin	Poland

Technical data

General

Number of positions	1
Number of levels	1
Number of connections	1
Potentials	1
Nominal cross section	6 mm²

Plug - PP-H 6/ 1-R - 3061729

Technical data

General

Color	gray
Insulating material	PA
Flammability rating according to UL 94	V0
Area of application	Railway industry
	Machine building
	Plant engineering
Assembly instructions	Use of a parallel pressing tool is recommended for easy latching of the COMBI connector and coupling elements for self-assembly
Rated surge voltage	8 kV
Degree of pollution	3
Overvoltage category	III
Insulating material group	I
Maximum load current	41 A (with 6 mm² conductor cross section)
Nominal current I_N	41 A
Nominal voltage U_N	1000 V
Open side panel	No
Relative insulation material temperature index (Elec., UL 746 B)	130 °C
Temperature index of insulation material (DIN EN 60216-1 (VDE 0304-21))	130 °C
Static insulating material application in cold	-60 °C
Surface flammability NFPA 130 (ASTM E 162)	passed
Specific optical density of smoke NFPA 130 (ASTM E 662)	passed
Calorimetric heat release NFPA 130 (ASTM E 1354)	28 MJ/kg
Smoke gas toxicity NFPA 130 (SMP 800C)	passed
Fire protection for rail vehicles (DIN EN 45545-2) R22	HL 1 - HL 3
Fire protection for rail vehicles (DIN EN 45545-2) R23	HL 1 - HL 3
Fire protection for rail vehicles (DIN EN 45545-2) R24	HL 1 - HL 3
Fire protection for rail vehicles (DIN EN 45545-2) R26	HL 1 - HL 3

Dimensions

Width	8.2 mm
Length	21 mm
Height	49.3 mm
	31.2 mm
Pitch	8.2 mm

Connection data

Connection	1 level
Connection method	Push-in connection
Stripping length	12 mm

Plug - PP-H 6/ 1-R - 3061729

Technical data

Connection data

Connection in acc. with standard	IEC 61984
Conductor cross section solid min.	0.5 mm²
Conductor cross section solid max.	10 mm²
Conductor cross section AWG min.	20
Conductor cross section AWG max.	8
Conductor cross section flexible min.	0.5 mm²
Conductor cross section flexible max.	6 mm²
Min. AWG conductor cross section, flexible	20
Max. AWG conductor cross section, flexible	10
Conductor cross section flexible, with ferrule without plastic sleeve min.	0.5 mm²
Conductor cross section flexible, with ferrule without plastic sleeve max.	6 mm²
Conductor cross section flexible, with ferrule with plastic sleeve min.	0.5 mm²
Conductor cross section flexible, with ferrule with plastic sleeve max.	6 mm²
Two conductors with the same cross section, flexible, with TWIN ferrules, with plastic sleeve, minimum	0.5 mm²
Two conductors with the same cross section, flexible, with TWIN ferrules, with plastic sleeve, maximum	1.5 mm²
Connection cross sections directly pluggable	1 mm² 10 mm²
Conductor cross section solid min.	1 mm²
Conductor cross section solid max.	10 mm²
Conductor cross section flexible, with ferrule without plastic sleeve min.	1 mm²
Conductor cross section flexible, with ferrule without plastic sleeve max.	6 mm²
Conductor cross section flexible, with ferrule with plastic sleeve min.	1 mm²
Conductor cross section flexible, with ferrule with plastic sleeve max.	6 mm²
Internal cylindrical gage	A5

Ambient conditions

Operating temperature	-60 °C ... 105 °C (max. short-term operating temperature 130°C)
Ambient temperature (storage/transport)	-25 °C ... 60 °C (for a short time, not exceeding 24 h, -60 °C to +70 °C)
Permissible humidity (storage/transport)	30 % ... 70 %
Ambient temperature (assembly)	-5 °C ... 70 °C
Ambient temperature (actuation)	-5 °C ... 70 °C

Standards and Regulations

Connection in acc. with standard	CSA
	IEC 61984
Flammability rating according to UL 94	V0

Environmental Product Compliance

China RoHS	Environmentally friendly use period: unlimited = EFUP-e

Plug - PP-H 6/ 1-R - 3061729

Technical data

Environmental Product Compliance

	No hazardous substances above threshold values

Drawings

Circuit diagram

Diagram

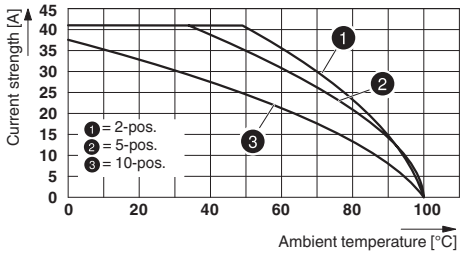

Schematic diagram

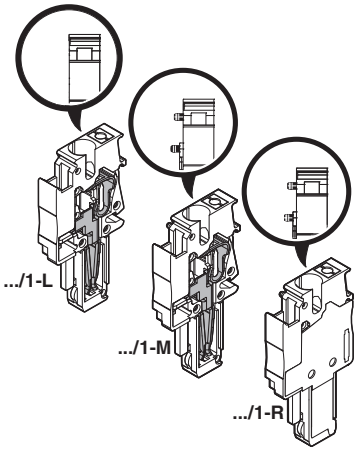

Classifications

eCl@ss

eCl@ss 10.0.1	27141151
eCl@ss 11.0	27141151
eCl@ss 4.0	27260700
eCl@ss 4.1	27260700
eCl@ss 5.0	27260700
eCl@ss 5.1	27260700
eCl@ss 6.0	27141100
eCl@ss 7.0	27141151

Plug - PP-H 6/ 1-R - 3061729

Classifications

eCl@ss

eCl@ss 9.0	27141151

ETIM

ETIM 3.0	EC000897
ETIM 4.0	EC002021
ETIM 6.0	EC002021
ETIM 7.0	EC002021

UNSPSC

UNSPSC 6.01	30211802
UNSPSC 7.0901	39121402
UNSPSC 11	39121402
UNSPSC 12.01	39121402
UNSPSC 13.2	39121402
UNSPSC 18.0	39121402
UNSPSC 19.0	39121402
UNSPSC 20.0	39121402
UNSPSC 21.0	39121402

Approvals

Approvals

Approvals

CSA / UL Recognized / cUL Recognized / EAC / IECEE CB Scheme / VDE Zeichengenehmigung / cULus Recognized

Ex Approvals

Approval details

CSA	http://www.csagroup.org/services-industries/product-listing/		13631
	B	C	D
Nominal voltage UN	600 V	600 V	600 V
Nominal current IN	40 A	40 A	5 A
mm²/AWG/kcmil	20-8	20-8	20-8

Plug - PP-H 6/ 1-R - 3061729

Approvals

UL Recognized		http://database.ul.com/cgi-bin/XYV/template/LISEXT/1FRAME/index.htm	FILE E 60425

	B	C
Nominal voltage UN	600 V	600 V
Nominal current IN	40 A	40 A
mm²/AWG/kcmil	20-8	20-8

cUL Recognized		http://database.ul.com/cgi-bin/XYV/template/LISEXT/1FRAME/index.htm	FILE E 60425

	B	C
Nominal voltage UN	600 V	600 V
Nominal current IN	40 A	40 A
mm²/AWG/kcmil	20-8	20-8

EAC		RU C-DE.BL08.B.00511

IECEE CB Scheme		http://www.iecee.org/	DE1-64372_B1_B2

Nominal voltage UN	1000 V

VDE Zeichengenehmigung		http://www2.vde.com/de/Institut/Online-Service/VDE-geprueftеProdukte/Seiten/Online-Suche.aspx	40043445

Nominal voltage UN	1000 V

cULus Recognized	

Accessories

Accessories

Plug - PP-H 6/ 1-R - 3061729

Accessories

Cable housing

Cable housing - PH 6/2 - 3000680

Cable housing, pitch: 16.4 mm, length: 21 mm, width: 16.4 mm, height: 52.3 mm, number of positions: 2, color: gray

---

Cable housing - PH 6/3 - 3000681

Cable housing, pitch: 24.6 mm, length: 21 mm, width: 24.6 mm, height: 52.3 mm, number of positions: 3, color: gray

---

Cable housing - PH 6/4 - 3000682

Cable housing, pitch: 32.8 mm, length: 21 mm, width: 32.8 mm, height: 52.3 mm, number of positions: 4, color: gray

---

Cable housing - PH 6/5 - 3000683

Cable housing, pitch: 41 mm, length: 21 mm, width: 41 mm, height: 52.3 mm, number of positions: 5, color: gray

---

Cable housing - PH 6/6 - 3000684

Cable housing, pitch: 49.2 mm, length: 21 mm, width: 49.2 mm, height: 52.3 mm, number of positions: 6, color: gray

---

Plug - PP-H 6/ 1-R - 3061729

Accessories

Cable housing - PH 6/7 - 3000685

Cable housing, pitch: 57.4 mm, length: 21 mm, width: 57.4 mm, height: 52.3 mm, number of positions: 7, color: gray

---

Insulating sleeve

Insulating sleeve - MPS-IH WH - 0201663

Insulating sleeve, color: white

Insulating sleeve - MPS-IH RD - 0201676

Insulating sleeve, color: red

Insulating sleeve - MPS-IH BU - 0201689

Insulating sleeve, color: blue

Insulating sleeve - MPS-IH YE - 0201692

Insulating sleeve, color: yellow

Plug - PP-H 6/ 1-R - 3061729

Accessories

Insulating sleeve - MPS-IH GN - 0201702

Insulating sleeve, color: green

Insulating sleeve - MPS-IH GY - 0201728

Insulating sleeve, color: gray

Insulating sleeve - MPS-IH BK - 0201731

Insulating sleeve, color: black

Labeled terminal marker

Zack Marker strip, flat - ZBF 8 CUS - 0825030

Zack Marker strip, flat, can be ordered: Strip, white, labeled according to customer specifications, mounting type: snap into flat marker groove, for terminal block width: 8 mm, lettering field size: 5.15 x 8.15 mm, Number of individual labels: 10

Zack Marker strip, flat - ZBF 8,LGS:FORTL.ZAHLEN - 0808804

Zack Marker strip, flat, Strip, white, labeled, printed horizontally: consecutive numbers 1 ... 10, 11 ... 20, etc. up to 101 ... 110, mounting type: snap into flat marker groove, for terminal block width: 8 mm, lettering field size: 5.15 x 8.15 mm, Number of individual labels: 10

Plug - PP-H 6/ 1-R - 3061729

Accessories

Marker for terminal blocks - UC-TMF 8 CUS - 0824654

Marker for terminal blocks, can be ordered: by sheet, white, labeled according to customer specifications, mounting type: snap into flat marker groove, for terminal block width: 8.2 mm, lettering field size: 7.6 x 5.1 mm, Number of individual labels: 56

Marker for terminal blocks - UCT-TMF 8 CUS - 0829672

Marker for terminal blocks, can be ordered: by sheet, white, labeled according to customer specifications, mounting type: snap into flat marker groove, for terminal block width: 8.2 mm, lettering field size: 7.4 x 4.7 mm, Number of individual labels: 42

Mounting material

Latching - PRZ - 3040614

Latching, length: 63.6 mm, width: 9.7 mm, number of positions: 2, color: orange

Latching - PR - 3040559

Latching, length: 29.8 mm, width: 4.4 mm, number of positions: 1, color: orange

Latching - PR/2 - 3040630

Latching, length: 29.8 mm, width: 10 mm, number of positions: 2, color: orange

Plug - PP-H 6/ 1-R - 3061729

Accessories

Latching - PRT/2 - 3040631

Latching, can only be released using a screwdriver, length: 23.2 mm, width: 9 mm, number of positions: 2, color: orange

---

Bend protection sleeve - CPH 9-15 - 3000768

Bend protection sleeve, for cable diameter of 9 mm ... 15 mm, diameter: 12 mm, color: black

---

Screwdriver tools

Screwdriver - SZF 2-0,8X4,0 - 1204520

Actuation tool, for ST terminal blocks, also suitable for use as a bladed screwdriver, size: 0.8 x 4.0 x 100 mm, 2-component grip, with non-slip grip

---

Shield connection

Shield connection clamp - PSH 3- 6 - 3040591

Shield connection clamp, color: black

Shield connection clamp - PSH 5-10 - 3040601

Shield connection clamp, color: black

Plug - PP-H 6/ 1-R - 3061729

Accessories

Shield connection - HSH-METALL-6/8 - 3000770

Shield connection, material: Metal, Suitable for PH 4/ and PH 6/ cable housings (pitches: 6 mm and 8 mm), color: silver/ black

Strain relief

Strain relief - PZ/2 - 3040627

Strain relief, length: 48.7 mm, width: 9.3 mm, number of positions: 2, color: black

Cable clamp - HSR 6/8 - 3000769

Cable clamp, color: silver

Terminal marking

Zack Marker strip, flat - ZBF 8:UNBEDRUCKT - 0808781

Zack Marker strip, flat, Strip, white, unlabeled, can be labeled with: PLOTMARK, CMS-P1-PLOTTER, mounting type: snap into flat marker groove, for terminal block width: 8 mm, lettering field size: 5.15 x 8.15 mm, Number of individual labels: 10

Plug - PP-H 6/ 1-R - 3061729

Accessories

Marker for terminal blocks - UC-TMF 8 - 0818137

Marker for terminal blocks, Sheet, white, unlabeled, can be labeled with: BLUEMARK ID COLOR, BLUEMARK ID, BLUEMARK CLED, PLOTMARK, CMS-P1-PLOTTER, mounting type: snap into flat marker groove, for terminal block width: 8.2 mm, lettering field size: 7.6 x 5.1 mm, Number of individual labels: 56

Marker for terminal blocks - UCT-TMF 8 - 0828748

Marker for terminal blocks, Sheet, white, unlabeled, can be labeled with: TOPMARK NEO, TOPMARK LASER, BLUEMARK ID COLOR, BLUEMARK ID, BLUEMARK CLED, THERMOMARK PRIME, THERMOMARK CARD 2.0, THERMOMARK CARD, mounting type: snap into flat marker groove, for terminal block width: 8.2 mm, lettering field size: 7.4 x 4.7 mm, Number of individual labels: 42

Test plug terminal block

Test plugs - MPS-MT - 0201744

Test plugs, with solder connection up to 1 mm² conductor cross section, color: gray

Phoenix Contact 2021 © - all rights reserved
http://www.phoenixcontact.com