MICRO SWITCH
FREEPORT, ILLINOIS, U.S.A.
A DIVISION OF HONEYWELL
FED. MFG. CODE 91929

INDICATOR UNIT
BARRIER MOUNT

CATALOG LISTING
2F200 SERIES
CHART 4

THIS DRAWING COVERS A PROPRIETARY ITEM AND IS THE PROPERTY OF MICRO SWITCH, A DIVISION OF HONEYWELL. THIS DRAWING IS NOT TO BE COPIED OR USED WITHOUT THE APPROVAL OF MICRO SWITCH.

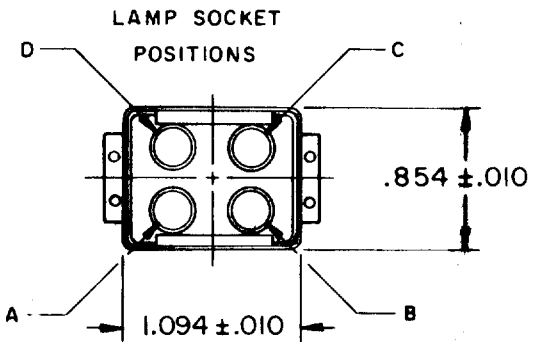

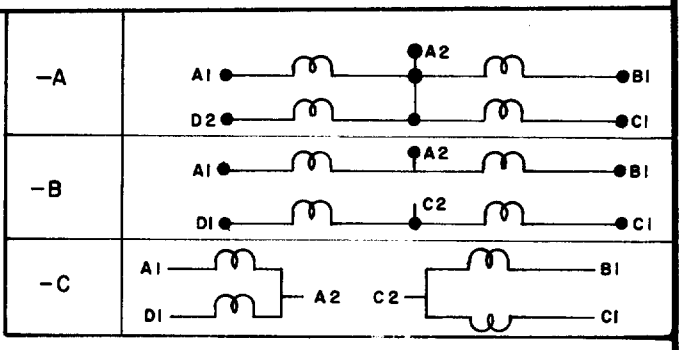

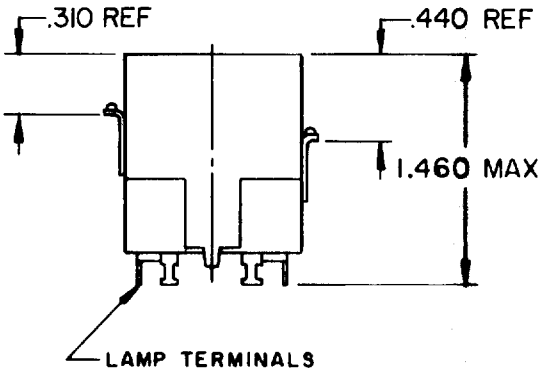

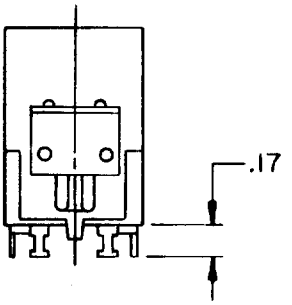

LAMP TERMINAL DESIGNATION A, B, C, D
TWO TERMINALS PER LAMP

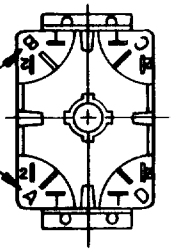

NOTE -
1 - TERMINALS ARE PLATED FOR SOLDERING
2 - RELAMPABLE FROM FRONT OF PANEL WITHOUT TOOLS

LAMP SOCKET POSITIONS	CATALOG LISTINGS INDICATOR
A, C	2F201
A, B, C, D	2F203
A, B, C, D	2F203-A

2F200 SERIES CHART 4
M
DRAWING NUMBER
X 2
ISSUE
REPLACES
RELEASE NO. SR-11637
CHECK
CHECK
CHECK
DRAWN GLH 18 FEB 74

REVISIONS
A 2F203-A PR-3952 GLH 2 MAR 74