MICRO SWITCH
FREEPORT, ILLINOIS, U.S.A.
A DIVISION OF HONEYWELL
FED. MFG. CODE 91929

SWITCH-UNIT MOMENTARY

2D SERIES
CHART 7

CATALOG LISTING	BASIC SWITCH CONTACT MATERIAL (4)				OPERATING FORCE (5)	WEIGHT
	1	2	3	4		
2D280	S	S			4 LBS MAX	14 GRAM MAX
2D281	S	S	S	S	4 LBS MAX	25 GRAM MAX
2D417	G	G	G	G	4 LBS MAX	25 GRAM MAX

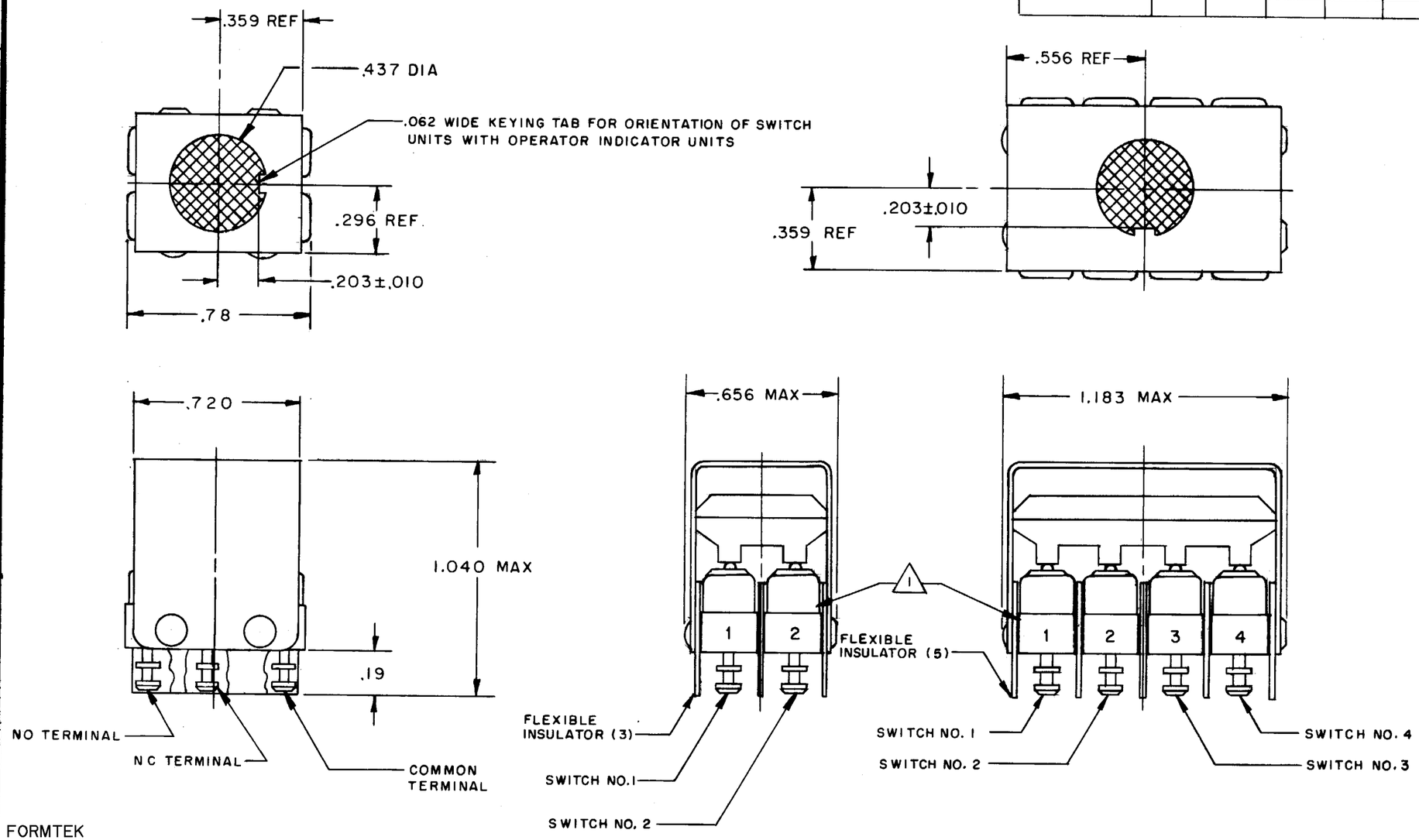

FORMTEK

THIS DRAWING COVERS A PROPRIETARY ITEM AND IS THE PROPERTY OF MICRO SWITCH, A DIVISION OF MINNEAPOLIS-HONEYWELL REGULATOR CO. THIS DRAWING IS NOT TO BE COPIED OR USED WITHOUT THE APPROVAL OF MICRO SWITCH.

CHARACTERISTICS

OPERATING FORCE — — — SEE CHART

ELECTRICAL DATA

CONTACT ARRANGEMENT

LOAD	SEA LEVEL 28 VDC	SEA LEVEL 115 VAC	50,000 FT 28 VDC
RESISTIVE	5.0 AMP	5.0 AMP	5.0 AMP
INDUCTIVE	3.0 AMP	5.0 AMP	2.5 AMP
LAMP	2.5 AMP	1.5 AMP	2.4 AMP

SCALE 2 TO 1

DO NOT SCALE PRINT

UNLESS OTHERWISE NOTED
DIMENSIONS ARE IN INCHES
TOLERANCES ARE:

ONE PLACE	(.0)	±.030
TWO PLACE	(.00)	±.015
THREE PLACE	(.000)	±.005
ANGLES		±

WEIGHT SEE CHART

NOTES

1. BASIC SWITCHES ARE IN ACCORDANCE WITH MS25085-2 EXCEPT FOR TERMINAL IDENTIFICATION
2. "T2" TERMINALS ARE PLATED FOR SOLDERING
3. SWITCHES DO NOT NECESSARILY OPERATE SIMULTANEOUSLY
4. "S" DENOTES SILVER, "G" DENOTES GOLD CONTACTS
5. MEASUREMENT TO BE TAKEN FROM FRONT OF LENS OF INDICATOR WHEN COMPLETE ASSEMBLY HAS BEEN MADE

2D SERIES CHART 7

M

DRAWING NUMBER

ISSUE 11

REPLACES

RELEASE NO. PR-820

CHECK

REVISIONS

A	PR-820	M B S 25 JULY 69
B	CO26820	M B S 23 JAN 70
C	CO29581	R C R 25 OCT 71
D	CO 33710	GL H 15 JUN 74
E	PR 7714	T M M 26 FEB 79
F	PR 8672	J M J 16 APR 80
G	PR20557	T S M 15 MAR 93
H	CO73917	T S M 2 APR 93
J	CO-84096	DCS 20 MAR 97
K	CO84187	J A F 14 MAY 97

CHECK 13 Feb 69

CHECK

CHECK

DRAWN M B S 30 JAN 69

FO-50378-003