MICRO SWITCH
FREEPORT ILLINOIS U S A
A DIVISION OF HONEYWELL
FED. MFG. CODE 81929

SWITCH—TOGGLE (MAGNETIC HOLD-IN)

CATALOG LISTING
26ET17-T

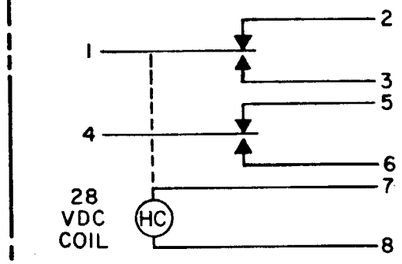

CIRCUIT DIAGRAM
(MECHANICALLY MAINTAINED POSITION)

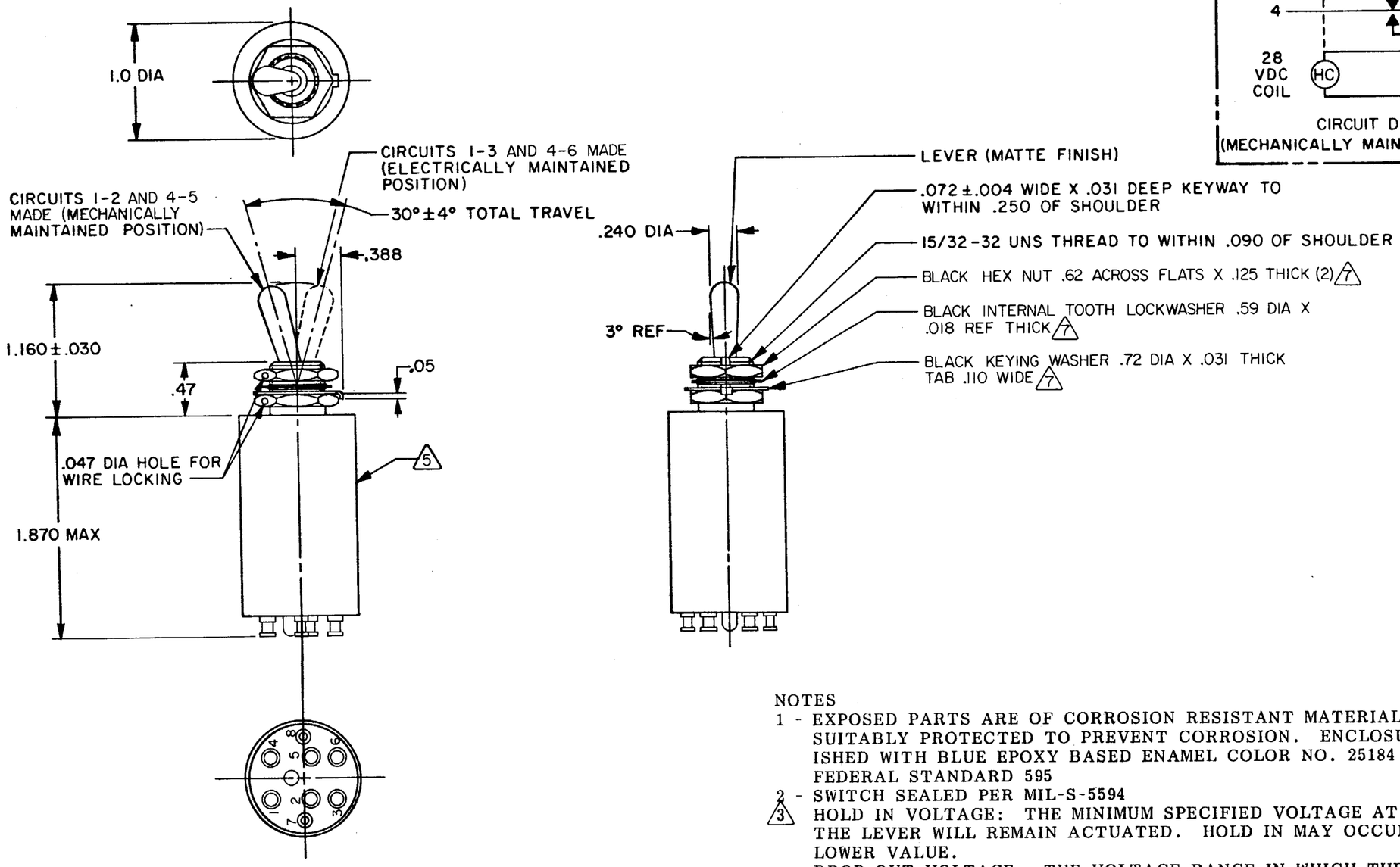

NOTES

1 - EXPOSED PARTS ARE OF CORROSION RESISTANT MATERIAL OR ARE SUITABLY PROTECTED TO PREVENT CORROSION. ENCLOSURE FINISHED WITH BLUE EPOXY BASED ENAMEL COLOR NO. 25184 PER FEDERAL STANDARD 595

2 - SWITCH SEALED PER MIL-S-5594

3 HOLD IN VOLTAGE: THE MINIMUM SPECIFIED VOLTAGE AT WHICH THE LEVER WILL REMAIN ACTUATED. HOLD IN MAY OCCUR AT A LOWER VALUE.
DROP OUT VOLTAGE: THE VOLTAGE RANGE IN WHICH THE LEVER WILL BE RELEASED

4 - CIRCUITS CAN BE TRANSFERRED MANUALLY. ENERGIZING THE COIL WILL NOT CAUSE TRANSFER OF CIRCUITS

5 CIRCUIT IDENTIFICATION IS SHOWN ON SWITCH

6 - SWITCHES DO NOT NECESSARILY OPERATE SIMULTANEOUSLY

7 HARDWARE MAYBE FURNISHED UNASSEMBLED PER MIL-S-5594

THIS DRAWING COVERS A PROPRIETARY ITEM AND IS THE PROPERTY OF MICRO SWITCH, A DIVISION OF HONEYWELL. THIS DRAWING IS NOT TO BE COPIED OR USED WITHOUT THE APPROVAL OF MICRO SWITCH.

THIRD ANGLE PROJECTION

SCALE FULL

DO NOT SCALE PRINT

TOLERANCES
APPLY TO DESIGN UNITS. CONVERSIONS ARE ONLY FOR REFERENCE. UNLESS NOTED TOLERANCES ARE ±

	DIM. mm	TOL. mm/m	DIM. in	TOL. mm/in
NO PLACES	X	1/24		
ONE PLACE	X.X	0.4/.016	X.X	0.8/.03
TWO PLACES	X.XX	0.15/.006	X.XX	0.38/.015
THREE PLACES			X.XXX	0.13/.005
ANGLES				

DESIGN UNITS SI METRIC ☐ US CUSTOMARY ■

RAW MATERIAL-COMMERCIAL STANDARD
MICRO SWITCH STANDARDS APPLY
DIMENSIONS ARE TO BE MET BEFORE PROTECTIVE COATINGS ARE APPLIED

WEIGHT 4.0 OZ MAX

CHARACTERISTICS 3

SOLENOID RATING AT 20°C

STEADY STATE LIMITS	20-29	VDC
HOLD IN	15	VDC
DROP OUT	0-15	VDC
COIL RESISTANCE	460 OHM	MIN
OPERATING FORCE	7 LB	MAX
OVERRIDE FORCE AT 29 VDC	7.5 LB	MAX

ELECTRICAL DATA

CONTACT ARRANGEMENT
S P D T (2)

LOAD	28 VDC SEA LEVEL	28 VDC 65,000 FT.
RES	4	4
IND	2.5	2.0
MOTOR	4	4

26ET17-T
M
DRAWING NUMBER
RELEASE NO. PR-4870
REPLACES
ISSUE 5
CHECK

REVISIONS
A CO 50177 R J H 28 SEP 81
B CO54584 JAS 26 JAN 84
C CO 53401 T M M 16 MAR 84

CHECK
CHECK
CHECK
DRAWN J H 28 SEP 81

FO-5285 1-A