MICRO SWITCH
FREEPORT, ILLINOIS, U.S.A.
A DIVISION OF HONEYWELL
FED. MFG. CODE 91929

ASSEMBLY-SWITCH

CATALOG LISTING
24AC22

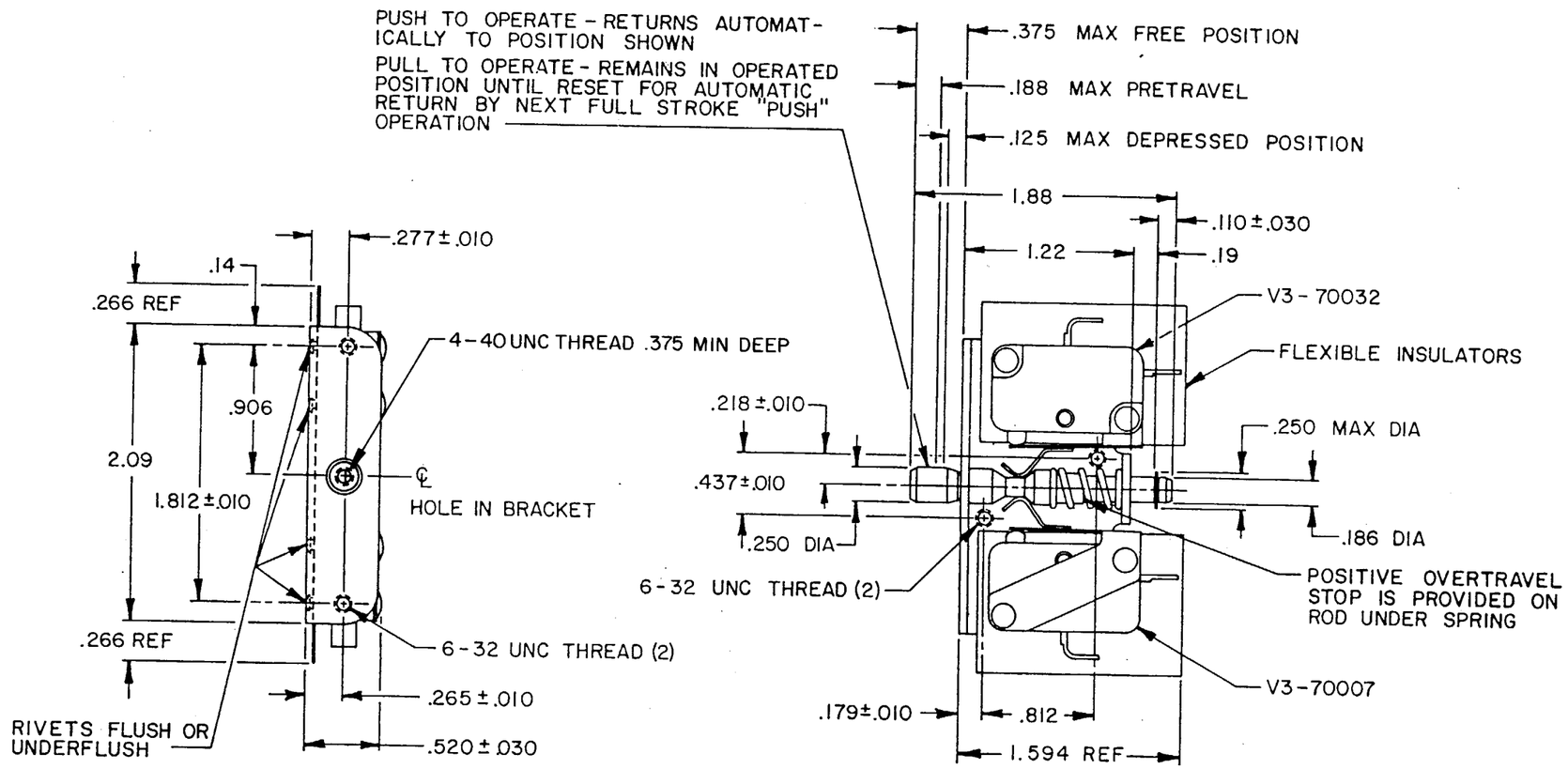

NOTES
1 - UNIT INCLUDES CAT. LIST. V3-70032 BASIC SWITCH (1) AND CAT. LIST. V3-70007 BASIC SWITCH (1)
2 - SWITCHES DO NOT NECESSARILY OPERATE SIMULTANEOUSLY
3 - NOTCH IN ACTUATOR ROD WILL PERMIT .035 DISPLACEMENT BETWEEN END OF ROD AND HOLE IN BRACKET
4 - BASIC SWITCH PLASTIC PARTS ARE MADE OF MINERAL FILLED PHENOLICS
5 - ACTUATOR ROD MADE OF HIGH STRENGTH PLASTIC

THIS DRAWING COVERS A PROPRIETARY ITEM AND IS THE PROPERTY OF MICRO SWITCH, A DIVISION OF HONEYWELL. THIS DRAWING IS NOT TO BE COPIED OR USED WITHOUT THE APPROVAL OF MICRO SWITCH.

CHARACTERISTICS	ELECTRICAL DATA
TOTAL TRAVEL .250 APPROX. PUSH DIRECTION .188 APPROX. PULL DIRECTION	CONTACT ARRANGEMENT SPNO (1) SPNC (1) 5A - 1/10 HP - 125 OR 250 VAC

SCALE FULL

DO NOT SCALE PRINT

UNLESS OTHERWISE SPECIFIED TOLERANCES ARE

ONE PLACE	(.0)	± .030
TWO PLACE	(.00)	± .015
THREE PLACE	(.000)	± .005
ANGLES		±

THIRD ANGLE PROJECTION

WEIGHT

DRAWN	J A P	29 DEC 89
CHECK	D G S	3 JAN 90
CHECK		
CHECK		
ISSUE	1	
DRAWING NUMBER	M	24AC22
RELEASE NO.	PR-17919	
REPLACES		

REVISIONS

FO-5285 1-B