MICRO SWITCH
FREEPORT ILLINOIS U S A
A DIVISION OF HONEYWELL
FED. MFG. CODE 91929

SWITCH – ENCLOSED

CATALOG LISTING
21EN13

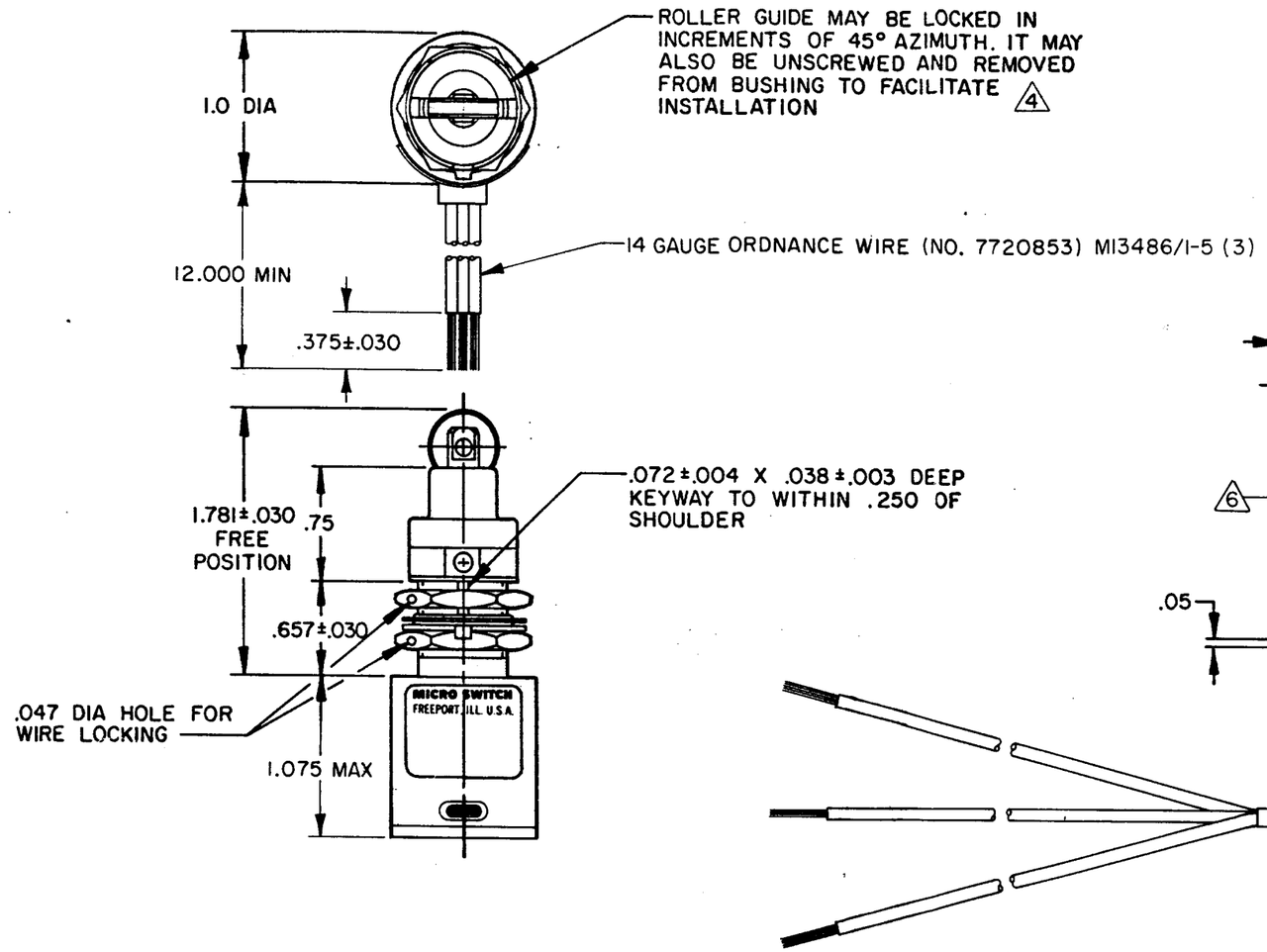

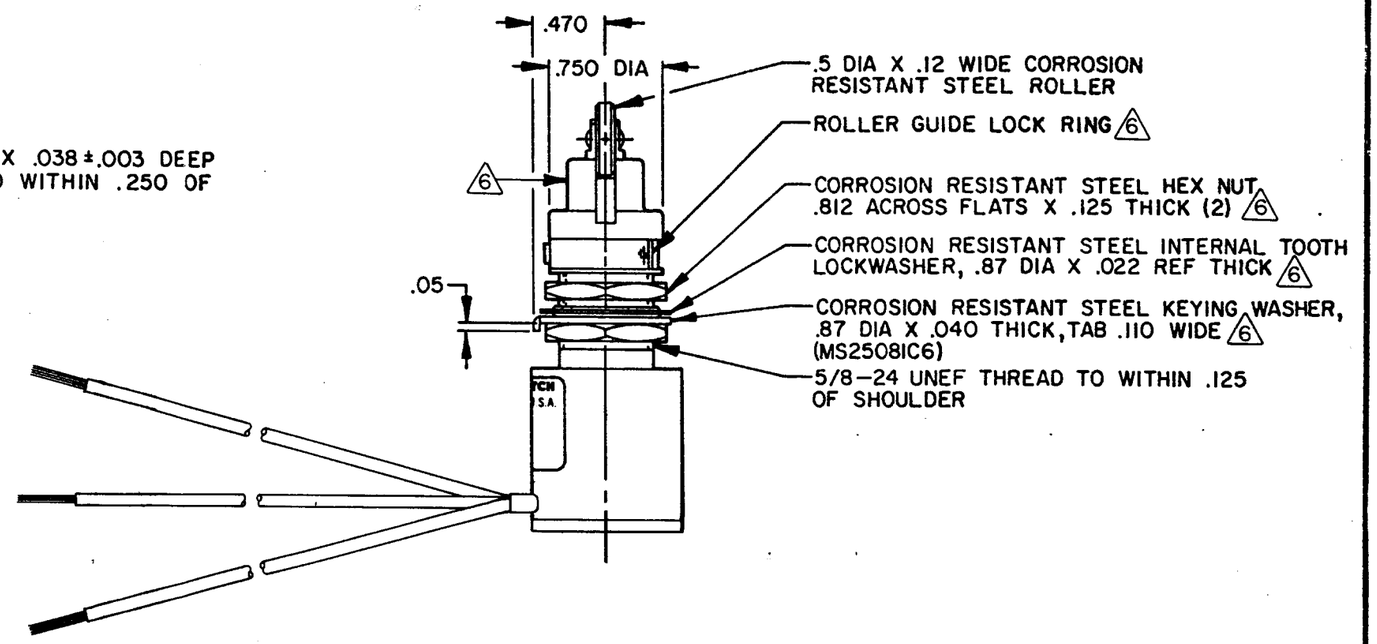

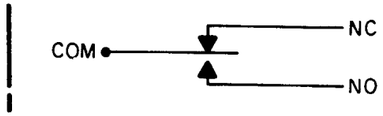

CIRCUIT DIAGRAM

NOTES

1 - CORROSION RESISTANT STEEL ENCLOSURE
2 - SWITCH SEALED PER MIL-S-8805 SYMBOL 4
3 - CIRCUIT DIAGRAM, CATALOG LISTING AND DATE CODE ARE SHOWN ON NAMEPLATE
4 TO ADJUST ROLLER DIRECTION, REMOVE ROLLER GUIDE LOCK RING, SCREW ROLLER GUIDE DOWN AS FAR AS POSSIBLE, THEN UNSCREW TO DESIRED DIRECTION. SECURE BY REPLACING ROLLER GUIDE LOCK RING

6 HARDWARE MAY BE PACKAGED UNASSEMBLED PER MIL-S-8805

THIS DRAWING COVERS A PROPRIETARY ITEM AND IS THE PROPERTY OF MICRO SWITCH, A DIVISION OF HONEYWELL. THIS DRAWING IS NOT TO BE COPIED OR USED WITHOUT THE APPROVAL OF MICRO SWITCH.

THIRD ANGLE PROJECTION

SCALE FULL

DO NOT SCALE PRINT

TOLERANCES
APPLY TO DESIGN UNITS. CONVERSIONS ARE ONLY FOR REFERENCE. UNLESS NOTED, TOLERANCES ARE ±

	DIM. mm	TOL. mm/in	DIM. in	TOL. mm/in
NO PLACES	X	1/.04		
ONE PLACE	X.X	0.4/.016	X.X	0.8/.03
TWO PLACES	X.XX	0.15/.006	X.XX	0.36/.015
THREE PLACES			X.XXX	0.13/.005
ANGLES				

DESIGN UNITS SI METRIC ☐ US CUSTOMARY ■

RAW MATERIAL–COMMERCIAL STANDARD
MICRO SWITCH STANDARDS APPLY
DIMENSIONS ARE TO BE MET BEFORE PROTECTIVE COATINGS ARE APPLIED

WEIGHT 5.6 OZ MAX

CHARACTERISTICS

OPERATING FORCE	6-12 LB
FULL OVERTRAVEL FORCE	30 LB MAX
RELEASE FORCE	4 LB MIN
PRETRAVEL	.040 MAX
DIFFERENTIAL TRAVEL	.020 MAX
OVERTRAVEL	.250 MIN

ELECTRICAL DATA

CONTACT ARRANGEMENT
S P D T

LOAD	28 VDC SEA LEVEL	28 VDC 50,000 FT.
RES	4	4
IND	2	2
MOTOR	4	
LAMP		

REVISIONS

A	C044351	CEB 11 SEPT 79
B	C046783	CJH 7 JUN 80
C	C047573 PART 4	RJH 7 AUG 80
D	C057094	TSK 28 MAR 85
E	C057370	MAM 15 MAY 85
F	C074101	DAW 8 FEB 93
G	C077504 C	DLT 26 JUL 94
H	C080095	DLT 14 MAR 95

M 21EN13

DRAWING NUMBER 26 26

ISSUE

RELEASE NO. PR-5550

REPLACES

CHECK

CHECK 12 SEPT 79

CHECK

CEB

CHECK

CEB 11 SEPT 79

DRAWN

FO-52851-A