DASH NO.	M CODE	MADE FROM

GSD

2025-60-9

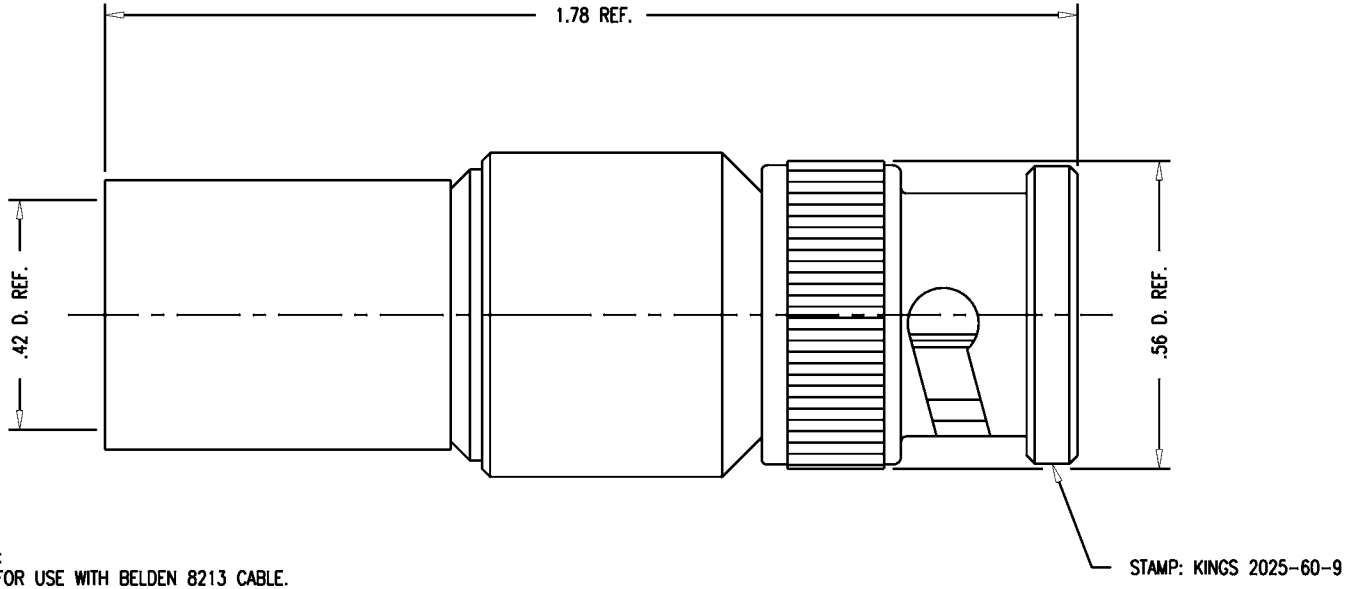

NOTES:
1. FOR USE WITH BELDEN 8213 CABLE.
2. FOR CABLING INSTRUCTIONS SEE CP-5402.
3. FOR CABLE TRIMMING USE KTJ-150 & KTD-138.
4. FOR CRIMPING USE DIE KTH-2004.
5. INTERFACE PER KINGS ES-17, FIG. 6.
6. CENTER CONTACT TO BE SUPPLIED UNASSEMBLED.
7. MATERIALS:
   INSULATOR: TEFLON, ASTM-D-1457
   K-GRIP SLEEVE: COM. BRONZE, ALLOY 220
   GASKET: SILICONE RUBBER, ZZ-R-765
   SPRING WASHER: BER. COPPER, ASTM-B-196
   ALL OTHER METAL PARTS: BRASS, ASTM-B16
8. FINISHES:
   SPRING WASHER: SILVER PLATE, QQ-S-365
   CENTER CONTACT: HARD GOLD PLATE, PER MIL-G-45204
   ALL OTHER METAL PARTS: KINGS TARNISH RESISTANT FINISH (TR-5)
9. ELECTRICAL CHARACTERISTICS:
   NOMINAL INPEDANCE: 75 OHMS
   WORKING VOLTAGE: 500 VRMS
   FREQUENCY RANGE: DC TO 2 GHz

GSD

REVISIONS

ISSUE	CHANGES
0	ER 32854 WJM 02/20/91
1	CN 33220 C WJM 08/20/91

WJM0834

SCALE 4:1

APPROX SURFACE AREA

USED ON

REF:

PLUG, 75 BNC

DRAWN	WJM	DATE	02/20/91
DESIGN	GA	DATE	02/23/91
APPR.		DATE	

KINGS
ELECTRONICS CO., INC.
TUCKAHOE, NEW YORK 10707

2025-60-9