THIS DRAWING IS UNPUBLISHED. RELEASED FOR PUBLICATION -,- .
© COPYRIGHT - By - ALL RIGHTS RESERVED.

LOC	DIST
AD	39

REVISIONS

P	LTR	DESCRIPTION	DATE	DWN	APVD
	J3	REVISED PER ECO-13-013724	28AUG2013	KH	MM

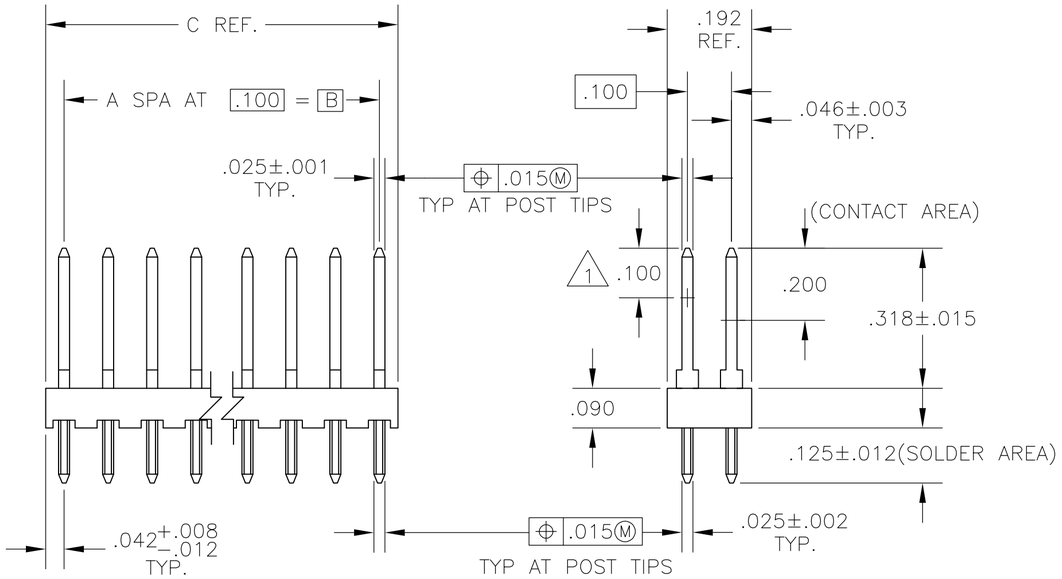

1 POINT OF MEASUREMENT FOR PLATING THICKNESS

2 THE TRUE POSITION TOLERANCE OF THE POST TIPS APPLIES WHEN THE HEADERS HELD FLAT AGAINST THE PRINTED CIRCUIT BOARD

3 OBSOLETE PARTS: OBSOLETE CIS STREAMLINING PER D.RENAUD/D.SINISI

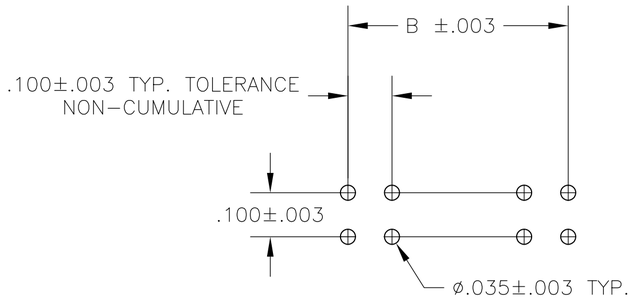

RECOMMENDED HOLE LAYOUT

	C	B	A	NO OF POS	ASSEMBLY PART NUMBER
	3.984	3.900	39	80	4-87215-0
3 OBSOLETE	3.884	3.800	38	78	~~3- -9~~
	3.784	3.700	37	76	~~3- -8~~
	3.684	3.600	36	74	~~3- -7~~
	3.584	3.500	35	72	~~3- -6~~
	3.484	3.400	34	70	~~3- -5~~
	3.384	3.300	33	68	~~3- -4~~
	3.284	3.200	32	66	~~3- -3~~
	3.184	3.100	31	64	~~3- -2~~
	3.084	3.000	30	62	~~3- -1~~
	2.984	2.900	29	60	3- -0
3 OBSOLETE	2.884	2.800	28	58	~~2- -9~~
	2.784	2.700	27	56	~~2- -8~~
	2.684	2.600	26	54	~~2- -7~~
	2.584	2.500	25	52	2- -6
	2.484	2.400	24	50	2- -5
3 OBSOLETE	2.384	2.300	23	48	~~2- -4~~
	2.284	2.200	22	46	2- -3
3 OBSOLETE	2.184	2.100	21	44	~~2- -2~~
	2.081	2.000	20	42	~~2 -1~~
	1.984	1.900	19	40	2- -0
	1.884	1.800	18	38	1- -9
3 OBSOLETE	1.784	1.700	17	36	~~1- -8~~
	1.684	1.600	16	34	1- -7
3 OBSOLETE	1.584	1.500	15	32	~~1- -6~~
	1.484	1.400	14	30	1- -5
3 OBSOLETE	1.384	1.300	13	28	~~1- -4~~
	1.084	1.000	10	22	1- -3
	.284	.200	2	6	1- -2
	.184	.100	1	4	1- -1
	.084	——	——	2	1- -0
	1.284	1.200	12	26	-9
	1.184	1.100	11	24	-8
	.984	.900	9	20	-7
	.884	.800	8	18	-6
	.784	.700	7	16	-5
	.684	.600	6	14	-4
	.584	.500	5	12	-3
	.484	.400	4	10	-2
	.384	.300	3	8	87215-1

87215

THIS DRAWING IS A CONTROLLED DOCUMENT.

DIMENSIONS: INCHES

TOLERANCES UNLESS OTHERWISE SPECIFIED:
0 PLC ± -
1 PLC ± -
2 PLC ± -
3 PLC ± .005
4 PLC ± -
ANGLES ± -

MATERIAL
HOUSING-FLAME RETARDENT THERMOPLASTIC, COLOR-BLACK
POSTS-PHOS BRONZE

FINISH
POSTS- .000030 GOLD ON THE CONTACT AREA, GOLD FLASH ON SOLDER AREA, ALL OVER .000050 NICKEL

DWN L. MAYER 3-15-85
CHK T. ZOLA 5-21-85
APVD R.ELICKER 5-21-85
PRODUCT SPEC —
APPLICATION SPEC —
WEIGHT —

TE Connectivity

NAME
ASSEMBLY, MOD II, HEADER, DOUBLE ROW, .100 X .100 CL. VERTICAL, .025 SQUARE POSTS

SIZE	CAGE CODE	DRAWING NO	RESTRICTED TO
A2	00779	C-87215	—

CUSTOMER DRAWING | SCALE — | SHEET 1 OF 1 | REV J3