Printed-circuit board connector - MSTB 2,5/16-STF-5,08 - 1778124

Please be informed that the data shown in this PDF Document is generated from our Online Catalog. Please find the complete data in the user's documentation. Our General Terms of Use for Downloads are valid
(http://phoenixcontact.com/download)

PCB connector, nominal current: 12 A, number of positions: 16, pitch: 5.08 mm, connection method: Screw connection with tension sleeve, color: green, contact surface: Tin

The figure shows a 10-position version of the product

Your advantages

- Well-known connection principle allows worldwide use
- Low temperature rise, thanks to maximum contact force
- Screwable flange for superior mechanical stability
- Allows connection of two conductors

Key Commercial Data

Packing unit	1 pc
GTIN	4 017918 039998
GTIN	4017918039998
Weight per Piece (excluding packing)	28.190 g
Custom tariff number	85366990
Country of origin	United States

Technical data

Dimensions

Length [l]	18.3 mm
Width [w]	91.29 mm
Height [h]	15 mm
Pitch	5.08 mm
Dimension a	76.2 mm

Printed-circuit board connector - MSTB 2,5/16-STF-5,08 - 1778124

Technical data

General

Range of articles	MSTB 2,5/..-STF
Number of positions	16
Connection method	Screw connection with tension sleeve
Insulating material group	I
Rated surge voltage (III/3)	4 kV
Rated surge voltage (III/2)	4 kV
Rated surge voltage (II/2)	4 kV
Rated voltage (III/3)	250 V
Rated voltage (III/2)	320 V
Rated voltage (II/2)	630 V
Connection in acc. with standard	EN-VDE
Nominal current I_N	12 A
Nominal cross section	2.5 mm²
Maximum load current	12 A (with a 2.5 mm² conductor cross section)
Insulating material	PA
Flammability rating according to UL 94	V0
Internal cylindrical gage	A3
Stripping length	7 mm
Screw thread	M3
Tightening torque, min	0.5 Nm
Tightening torque max	0.6 Nm

Connection data

Conductor cross section solid min.	0.2 mm²
Conductor cross section solid max.	2.5 mm²
Conductor cross section flexible min.	0.2 mm²
Conductor cross section flexible max.	2.5 mm²
Conductor cross section flexible, with ferrule without plastic sleeve min.	0.25 mm²
Conductor cross section flexible, with ferrule without plastic sleeve max.	2.5 mm²
Conductor cross section flexible, with ferrule with plastic sleeve min.	0.25 mm²
Conductor cross section flexible, with ferrule with plastic sleeve max.	2.5 mm²
Conductor cross section AWG min.	24
Conductor cross section AWG max.	12
2 conductors with same cross section, solid min.	0.2 mm²
2 conductors with same cross section, solid max.	1 mm²
2 conductors with same cross section, stranded min.	0.2 mm²
2 conductors with same cross section, stranded max.	1.5 mm²

Printed-circuit board connector - MSTB 2,5/16-STF-5,08 - 1778124

Technical data

Connection data

2 conductors with same cross section, stranded, ferrules without plastic sleeve, min.	0.25 mm²
2 conductors with same cross section, stranded, ferrules without plastic sleeve, max.	1 mm²
2 conductors with same cross section, stranded, TWIN ferrules with plastic sleeve, min.	0.5 mm²
2 conductors with same cross section, stranded, TWIN ferrules with plastic sleeve, max.	1.5 mm²
Minimum AWG according to UL/CUL	30
Maximum AWG according to UL/CUL	12

Standards and Regulations

Connection in acc. with standard	EN-VDE
	CSA
Flammability rating according to UL 94	V0

Environmental Product Compliance

	Lead 7439-92-1
China RoHS	Environmentally Friendly Use Period = 50
	For details about hazardous substances go to tab “Downloads”, Category “Manufacturer's declaration”

Drawings

Printed-circuit board connector - MSTB 2,5/16-STF-5,08 - 1778124

Diagram

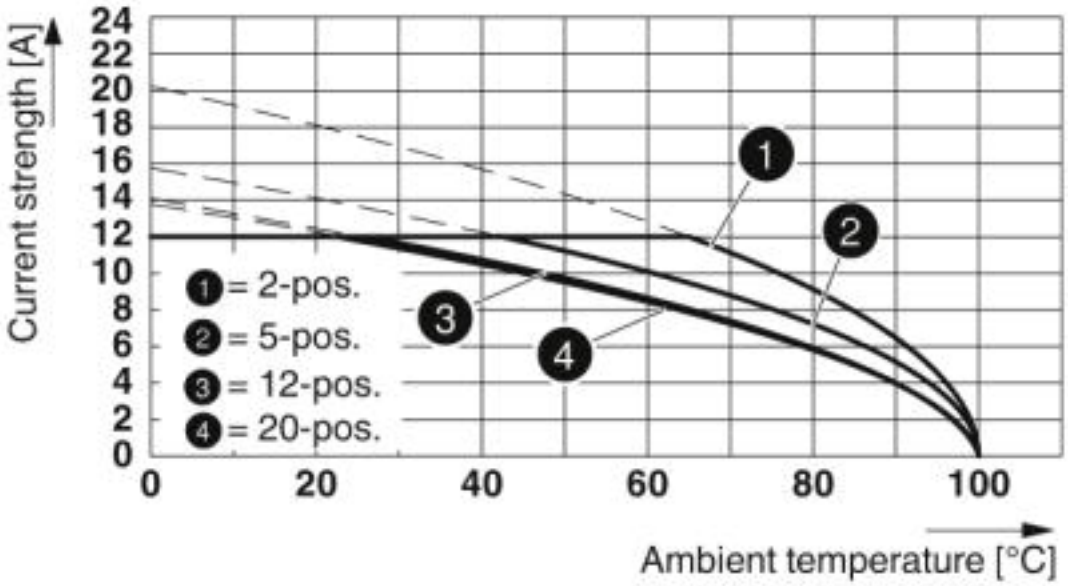

Type: MSTB 2,5/...-STF-5,08 with MSTBV 2,5/...-GF-5,08

Dimensional drawing

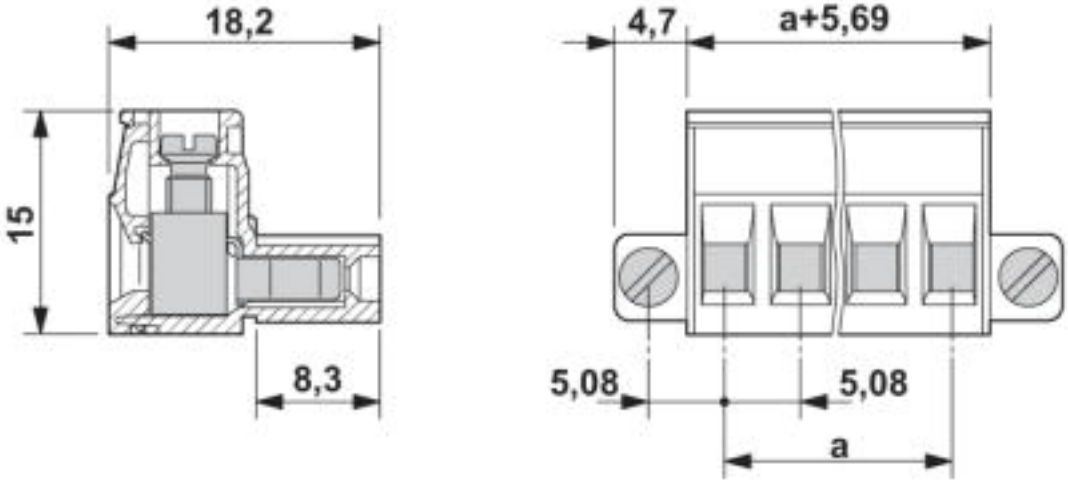

Classifications

eCl@ss

eCl@ss 4.0	27260700
eCl@ss 4.1	27260700

Printed-circuit board connector - MSTB 2,5/16-STF-5,08 - 1778124

Classifications

eCl@ss

eCl@ss 5.0	27260700
eCl@ss 5.1	27260700
eCl@ss 6.0	27260700
eCl@ss 7.0	27440309
eCl@ss 8.0	27440309
eCl@ss 9.0	27440309

ETIM

ETIM 3.0	EC001121
ETIM 4.0	EC002638
ETIM 5.0	EC002638
ETIM 6.0	EC002638
ETIM 7.0	EC002638

UNSPSC

UNSPSC 6.01	30211810
UNSPSC 7.0901	39121409
UNSPSC 11	39121409
UNSPSC 12.01	39121409
UNSPSC 13.2	39121409

Approvals

Approvals

Approvals

DNV GL / CSA / RS / IECEE CB Scheme / VDE Gutachten mit Fertigungsüberwachung / EAC / cULus Recognized

Ex Approvals

Approval details

DNV GL		https://approvalfinder.dnvgl.com/	TAE00001EY

Printed-circuit board connector - MSTB 2,5/16-STF-5,08 - 1778124

Approvals

CSA	http://www.csagroup.org/services-industries/product-listing/		LR13631-2585950
	B	D	
Nominal voltage UN	300 V	300 V	
Nominal current IN	15 A	10 A	
mm²/AWG/kcmil	28-12	28-12	

RS	http://www.rs-head.spb.ru/en/index.php	17.00014.272

IECEE CB Scheme	http://www.iecee.org/	DE1-60988-B1B2
Nominal voltage UN	250 V	
Nominal current IN	12 A	
mm²/AWG/kcmil	0.2-2.5	

VDE Gutachten mit Fertigungsüberwachung	http://www2.vde.com/de/Institut/Online-Service/VDE-gepruefteProdukte/Seiten/Online-Suche.aspx	40004701
Nominal voltage UN	250 V	
Nominal current IN	12 A	
mm²/AWG/kcmil	0.2-2.5	

EAC	B.01742

cULus Recognized	http://database.ul.com/cgi-bin/XYV/template/LISEXT/1FRAME/index.htm		E60425-19931011
	B	D	
Nominal voltage UN	300 V	150 V	
Nominal current IN	15 A	15 A	

Printed-circuit board connector - MSTB 2,5/16-STF-5,08 - 1778124

Approvals

	B	D
mm²/AWG/kcmil	30-12	30-12

Accessories

Accessories

Bridge

Insertion bridge - EBP 2- 5 - 1733169

Insertion bridge - EBP 4- 5 - 1733185

Insertion bridge - EBP 5- 5 - 1733198

Insertion bridge - EBP 3- 5 - 1733172

Printed-circuit board connector - MSTB 2,5/16-STF-5,08 - 1778124

Accessories

Insertion bridge - EBP 6- 5 - 1733208

Cable housing

Cable housing - KGS-MSTB 2,5/16 - 1783850

Cable housing, pitch: 0 mm, number of positions: 16, dimension a: 80 mm, color: green

Coding element

Coding profile - CP-MSTB - 1734634

Coding profile, is inserted into the slot on the plug or inverted header, red insulating material

Labeled terminal marker

Marker card - SK 5,08/3,8:FORTL.ZAHLEN - 0804293

Marker card, Card, white, labeled, Horizontal: consecutive numbers 1 ... 10, 11 ... 20, etc. up to 91 ... (99)100, mounting type: adhesive, for terminal block width: 5.08 mm, lettering field size: 5.08 x 3.8 mm

Marker pen

Printed-circuit board connector - MSTB 2,5/16-STF-5,08 - 1778124

Accessories

Marker pen - B-STIFT - 1051993

Marker pen, for manual labeling of unprinted Zack strips, smear-proof and waterproof, line thickness 0.5 mm

---

Marker pen - X-PEN 0,35 - 0811228

Marker pen without ink cartridge, for manual labeling of markers, labeling extremely wipe-proof, line thickness 0.35 mm

---

Screwdriver tools

Screwdriver - SZS 0,6X3,5 - 1205053

Actuation tool, for ST terminal blocks, insulated, also suitable for use as a bladed screwdriver, size: 0.6 x 3.5 x 100 mm, 2-component grip, with non-slip grip

---

Terminal marking

Marker card - SK U/3,8 WH:UNBEDRUCKT - 0803906

Marker card, Sheet, white, unlabeled, can be labeled with: PLOTMARK, CMS-P1-PLOTTER, Office printing systems, mounting type: adhesive, for terminal block width: 210 mm, lettering field size: 186 x 3.8 mm, Number of individual labels: 1440

Additional products

Printed-circuit board connector - MSTB 2,5/16-STF-5,08 - 1778124

Accessories

Feed-through header - MSTB 2,5/16-GF-5,08 - 1776647

PCB headers, nominal current: 12 A, number of positions: 16, pitch: 5.08 mm, color: green, contact surface: Tin, mounting: Wave soldering

---

Printed-circuit board connector - MSTBV 2,5/16-GF-5,08 - 1777219

PCB headers, nominal current: 12 A, number of positions: 16, pitch: 5.08 mm, color: green, contact surface: Tin, mounting: Wave soldering

---

Printed-circuit board connector - DFK-MSTBA 2,5/16-GF-5,08 - 1899126

Feed-through header, nominal current: 12 A, number of positions: 16, pitch: 5.08 mm, color: green, contact surface: Tin, mounting: Wave soldering

---

Printed-circuit board connector - DFK-MSTBVA 2,5/16-GF-5,08 - 1899427

Feed-through header, nominal current: 12 A, number of positions: 16, pitch: 5.08 mm, color: green, contact surface: Tin, mounting: Wave soldering

---

Phoenix Contact 2019 © - all rights reserved
http://www.phoenixcontact.com