D-SUB pressure nut - VS-M16 (5-9) - 1688447

Please be informed that the data shown in this PDF Document is generated from our Online Catalog. Please find the complete data in the user's documentation. Our General Terms of Use for Downloads are valid
(http://phoenixcontact.com/download)

D-SUB cap nut with line seal, for sleeve housing VS-09-..., conductor diameter of 5 mm ... 9 mm

Your advantages

- Including seal
- Easy mounting

RoHS

Key Commercial Data

Packing unit	5 pc
Minimum order quantity	5 pc
GTIN	4 017918 818364
GTIN	4017918818364
Weight per Piece (excluding packing)	2.690 g
Custom tariff number	39269097
Country of origin	Germany

Technical data

Mechanical characteristics

External cable diameter	5 mm ... 9 mm
Color	gray
Degree of protection	IP67
Type of the screw connection	M16

Ambient conditions

Ambient temperature (operation)	-40 °C ... 80 °C
Ambient temperature (assembly)	-20 °C ... 80 °C

Material data

Flammability rating according to UL 94	V0

D-SUB pressure nut - VS-M16 (5-9) - 1688447

Technical data

Material data

Housing material	PA
Sealing material	Neoprene
Seal material	Neoprene

Standards and Regulations

Flammability rating according to UL 94	V0

Drawings

Dimensional drawing

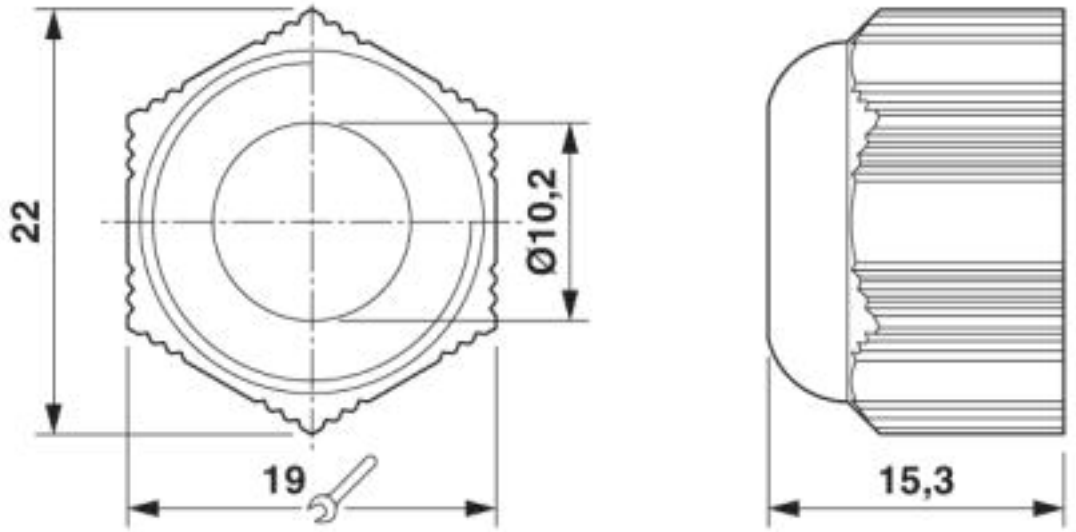

Seal

D-SUB pressure nut - VS-M16 (5-9) - 1688447

Dimensional drawing

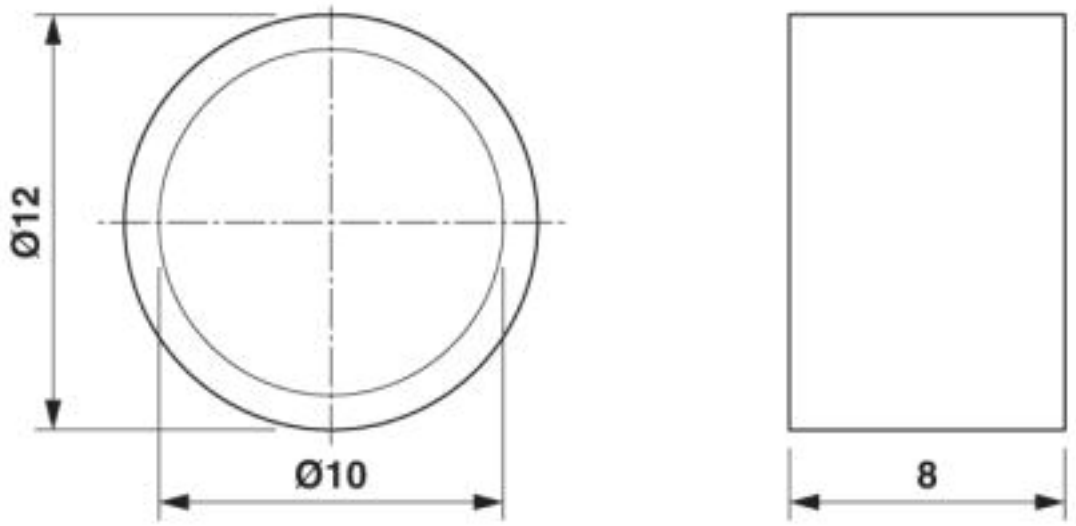

Screw pressure nut

Classifications

eCl@ss

eCl@ss 4.0	27141200
eCl@ss 4.1	27141200
eCl@ss 5.0	27149100
eCl@ss 5.1	27149100
eCl@ss 6.0	27149100
eCl@ss 7.0	27069215
eCl@ss 8.0	27069215
eCl@ss 9.0	27144420

ETIM

ETIM 2.0	EC000441
ETIM 3.0	EC000441
ETIM 4.0	EC000441
ETIM 5.0	EC000814
ETIM 6.0	EC000814
ETIM 7.0	EC000814

UNSPSC

UNSPSC 6.01	30211923
UNSPSC 7.0901	39121522
UNSPSC 11	39121522
UNSPSC 12.01	39121522
UNSPSC 13.2	31161514

D-SUB pressure nut - VS-M16 (5-9) - 1688447

Approvals

Approvals

Approvals

EAC

Ex Approvals

Approval details

EAC	EAC	B.01742

Accessories

Accessories

Sleeve housings

D-SUB sleeve housings - VS-09-T-2M16 - 1688353

D-SUB sleeve housings, degree of protection: IP67, material: PA, cable outlet: Angled, size of housing: 1, color: gray

Phoenix Contact 2019 © - all rights reserved
http://www.phoenixcontact.com