| PART NUMBER | ITEM ① BODY | ITEM ② BASE | ITEM ③ CONTACT (ONE PIECE) | ITEM ④ INSULATOR | ITEM ⑤ INSULATOR |
|---|---|---|---|---|---|
| 142-0701-321 | BRASS<br>GOLD PL .00001 MIN OVER<br>NICKEL PL .00005 MIN OVER<br>COPPER PL .00005 MIN | BRASS<br>GOLD PL .00001 MIN OVER<br>NICKEL PL .00005 MIN OVER<br>COPPER PL .00005 MIN | BERYLLIUM COPPER<br>GOLD PL .00003 MIN OVER<br>NICKEL PL .00005 MIN OVER<br>COPPER PL .00005 MIN | TEFLON | TEFLON |
| 142-0701-326 | BRASS<br>NICKEL PL .0001 MIN OVER<br>COPPER PL .00005 MIN | BRASS<br>NICKEL PL .0001 MIN OVER<br>COPPER PL .00005 MIN | BERYLLIUM COPPER<br>GOLD PL .00003 MIN OVER<br>NICKEL PL .00005 MIN OVER<br>COPPER PL .00005 MIN | TEFLON | TEFLON |
| 142-0701-327 | BRASS<br>NICKEL PL .0001 MIN OVER<br>COPPER PL .00005 MIN | BRASS<br>NICKEL PL .0001 MIN OVER<br>COPPER PL .00005 MIN | BERYLLIUM COPPER<br>GOLD PL .00003 MIN OVER<br>NICKEL PL .00005 MIN OVER<br>COPPER PL .00005 MIN | TEFLON | TEFLON |

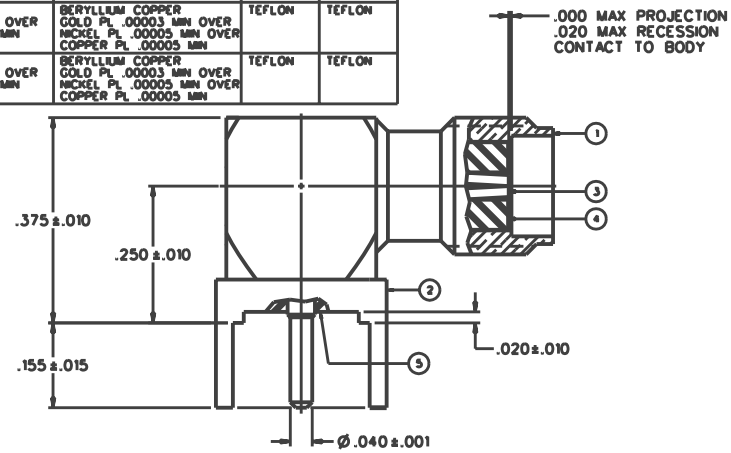


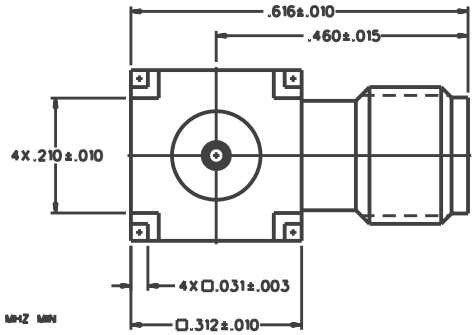


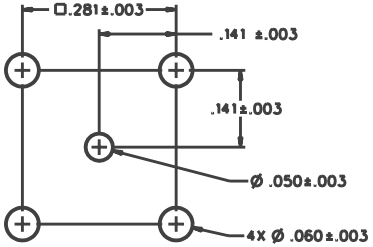


MOUNTING HOLE LAYOUT

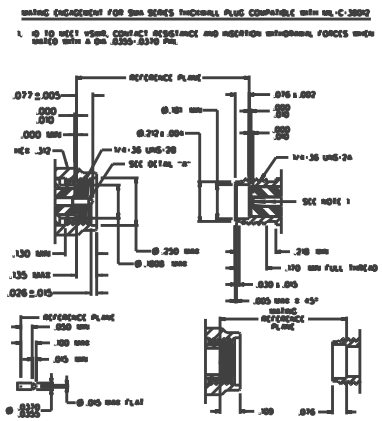


NOTES:

1. SPECIFICATIONS:

IMPEDANCE: 50 OHMS
FREQUENCY RANGE: 0.5-18 GHZ
VSWR: NOT APPLICABLE
WORKING VOLTAGE: 335 VRMS MAX AT SEA LEVEL
DIELECTRIC WITHSTANDING VOLTAGE: 1000 VRMS MIN AT SEA LEVEL
INSULATION RESISTANCE: 5000 MEGOHM MIN
CONTACT RESISTANCE:
CENTER CONTACT - INITIAL 3.0 MILLIOHM MAX, AFTER ENVIRONMENTAL 4.0 MILLIOHM MAX
OUTER CONDUCTOR - INITIAL 2.0 MILLIOHM MAX AFTER ENVIRONMENTAL NOT APPLICABLE
BRAID TO BODY - NOT APPLICABLE
CORONA LEVEL: 250 VOLTS MIN AT 70,000 FEET
INSERTION LOSS: NOT APPLICABLE
RF LEAKAGE: NOT APPLICABLE
RF HIGH POTENTIAL WITHSTANDING VOLTAGE: 670 VRMS AT 4 AND 7 MHZ MIN

MECHANICAL:

ENGAGE/DISENGAGE TORQUE: 2 INCH-POUNDS MAX
MATING TORQUE: 7-10 INCH POUNDS
COUPLING PROOF TORQUE: 15 INCH-POUNDS MIN
COUPLING NUT RETENTION: NOT APPLICABLE
CONTACT RETENTION: 6 LBS MIN AXIAL FORCE
CABLE ACCEPTABILITY: NOT APPLICABLE
CABLE HEX CRIMP SIZE: NOT APPLICABLE
CABLE RETENTION: NOT APPLICABLE
DURABILITY: 500 CYCLES MIN

ENVIRONMENTAL:

(MEETS OR EXCEEDS THE APPLICABLE PARAGRAPH OF MIL-C-39012)
THERMAL SHOCK: MIL-STD-202, METHOD 107, CONDITION B
OPERATING TEMPERATURE: -65 DEG C TO 185 DEG C
CORROSION: MIL-STD-202, METHOD 101, CONDITION B
SHOCK: MIL-STD-202, METHOD 213, CONDITION I
VIBRATION: MIL-STD-202, METHOD 204, CONDITION D

DRAWING NO.
C - 142-0701-321/330

| 0 | REVISIONS | | |
|---|---|---|---|
| ENGINEERING RELEASE | | | |
| 2 | 3-16-92 | RHM | 3-20-90 ECO 40909 |
| ADDED: P/N 142-0701-327 CHANGED: RF HIGH POT 4 AND 7 MHZ MIN WAS 5 MHZ MIN | | | |
| 3 | 3-18-93 | RHM | 1-25-93 ECO 41607 |
| ADDED: CONTACT LOCATION | | | |
| 4 | 3-18-93 | RHM | 1-25-93 ECO 41756 |
| VERSION UPDATE | | | |
| 4a | 3-10-94 | RHM | 3-29-94 ECN 42347 |
| UPDATED GRAPHICS | | | |
| 5 | 11-7-94 | RHM | 11-10-94 ECN 42783 |
| CHANGED: UPDATED GRAPHICS | | | |
| 5a | 9-22-97 | RHM | ECN 44926 |
| VERSION UPDATE | | | |
| 5b | 3-20-01 | RHM | ECN 47504 |

* REVISION NUMBER FOLLOWED BY AN ALPHA *
* CHARACTER INDICATES DRAWING CLARIFI- *
* CATION OR PART NUMBER ADDITION ONLY. *

CUSTOMER DRAWING

THIS DRAWING TO BE INTERPRETED PER ANSI Y 14.5M - 1982

"μSTATION"

COMPANY CONFIDENTIAL

| TOLERANCE UNLESS OTHERWISE SPECIFIED | | DRAWN BY RJB | DATE 2-5-92 | JOHNSON Components® 299 Johnson Ave. P.O. Box 1732 Waseca, MN 56093-0832 |
|---|---|---|---|---|
| DECIMALS .XX | mm | CHECKED BY | DATE | TITLE JACK ASSEMBLY, RA PC MOUNT SMA |
| .XXX | | APPROVED BY RJB | DATE 3-16-92 | |
| MATL | | APPROVED BY | DATE | CODE NO. / DRAWING NO. C - 142-0701-321/330 |
| FINISH | | RELEASE DATE 3-20-92 | | SCALE 7:1 / UM INCH / SHEET 2 OF 2 |