1-172170-2 Product Details

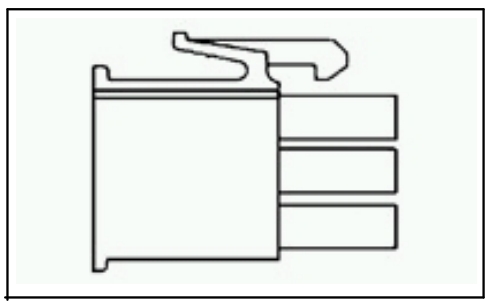

1-172170-2

Active

.163" Centerline, 600 V, 9.5 A max.

RoHS Compliant (Statement of Compliance)

Product Highlights:

- Housing
- Mini-Universal MATE-N-LOK
- Number of Circuits = 12
- 4.14 x 4.14 mm Centerline, Matrix
- Matrix Contact Layout

View all Features

Quick Links

Check Pricing & Availability
Search for Tooling
View Mating Products (1)
Product Feature Selector
Contact Us About This Product

Documentation & Additional Information

Product Drawings:

- 12POS MINI UNIVERSAL MATE-N-LOCK CONN PLUG HOUSING (... (PDF, English)

Catalog Pages/Data Sheets:

- None Available

Product Specifications:

- Mini-Universal MATE-N-LOK Connector(UL 94V-0 Grade) (PDF, English)

Application Specifications:

- Mini-Universal MATE-N-LOK Connectors (PDF, English)

Instruction Sheets:

- Mini-Universal MATE-N-LOK Connector (PDF, English)

CAD Files: (CAD Format & Compression Information)

- 3D Model (STEP, Version D)
- 3D Model (IGES, Version D)
- 2D Drawing (DXF, Version D)

List all Documents

Additional Information:

- Product Line Information

Related Products:

- Tooling
- Mating Products (1)

Product Features (Please use the Product Drawing for all design activity)

Product Type Features:

- Product Type = Housing
- Connector Line = Mini-Universal MATE-N-LOK
- Number of Circuits = 12
- Mount = Free Hanging
- Gender = Plug
- Color = Red
- Lock Type = Positive Lock

Electrical Characteristics:

- Voltage (VAC) = 600

Body Related Features:

- Centerline, Matrix (mm [in]) = 4.14 x 4.14 [.163 x .163]
- Contact Diameter (mm [in]) = 0.99 [0.039]

Contact Related Features:

- Contact Layout = Matrix
- CompactPCI = No

Housing Related Features:

- Housing Material = Nylon
- Housing Flammability Rating = UL 94V-0

Industry Standards:

- RoHS/ELV Compliance = RoHS compliant, ELV compliant
- Lead Free Solder Processes = Not relevant for lead free process
- RoHS/ELV Compliance History = Always was RoHS compliant

Packaging Related Features:

- Packaging Method = One Piece Housing

Other:

- Brand = AMP

© 2007 Tyco Electronics Corporation All Rights Reserved