Part Number: 1041340211
Status: Active
Overview: Automotive Bulb Sockets
Description: T20 Bulb Socket Single Housing Assembly, W21W, Unsealed, Black

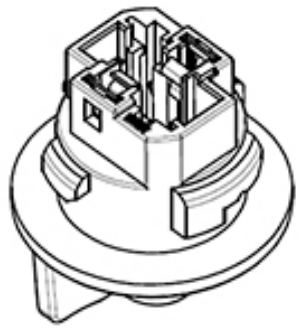

Series image - Reference only

Documents:
Drawing (PDF)
Product Specification PS-104133-001 (PDF)
Packaging Specification PK-104134-001-001 (PDF)
RoHS Certificate of Compliance (PDF)

General

Product Family	Other Sockets
Series	104134
Comments	T20 Bulb Socket Unsealed, T20 Bulb Socket Unsealed
Component Type	Socket
Overview	Automotive Bulb Sockets
Product Name	T20 Bulb Socket
UPC	884982895737

Physical

Circuits (Loaded)	2
Circuits (maximum)	2
Color - Resin	Black
Durability (mating cycles max)	Contact Molex
Entry Angle	Vertical
Keying to Mating Part	None
Material - Resin	Liquid Crystal Polymer
Net Weight	7.926/g
PCB Locator	No
PCB Retention	N/A
Packaging Type	Bag
Pitch - Mating Interface	N/A
Temperature Range - Operating	-40° to +85°C
Termination Interface: Style	Through Hole

Electrical

Current - Maximum per Contact	Major 2.4A, Minor 0.6A
Voltage - Maximum	14V DC

Solder Process Data

Lead-freeProcess Capability	N/A

Material Info

Reference - Drawing Numbers

Packaging Specification	PK-104134-001-001
Product Specification	PS-104133-001
Sales Drawing	SD-104134-001

EU ELV
Compliant

EU RoHS
Compliant

China RoHS

REACH SVHC
Not Contained Per - ED/71/2019 (16 July 2019)

Halogen-Free Status
Low-Halogen

For more information, please visit Contact US

China ROHS	Not Relevant
ELV	Compliant
RoHS Phthalates	Not Contained

Search Parts in this Series
104134 Series

Mates With
T20 Base Bulb

Use With
T20 Single Type Bulb Socket Terminal
498699102