HONEYWELL

103FW12-R3

See full Datasheet below...

onlinecomponents.com
THE ONLINE DISTRIBUTOR OF ELECTRONIC COMPONENTS

BUY NOW

MASTER™ ELECTRONICS

BUY NOW

masterelectronics.com & onlinecomponents.com
are **authorized** e-commerce distributors
of electronic components.

M 103FW12-R3

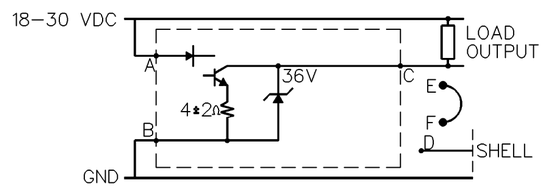

INTERFACE SCHEMATIC

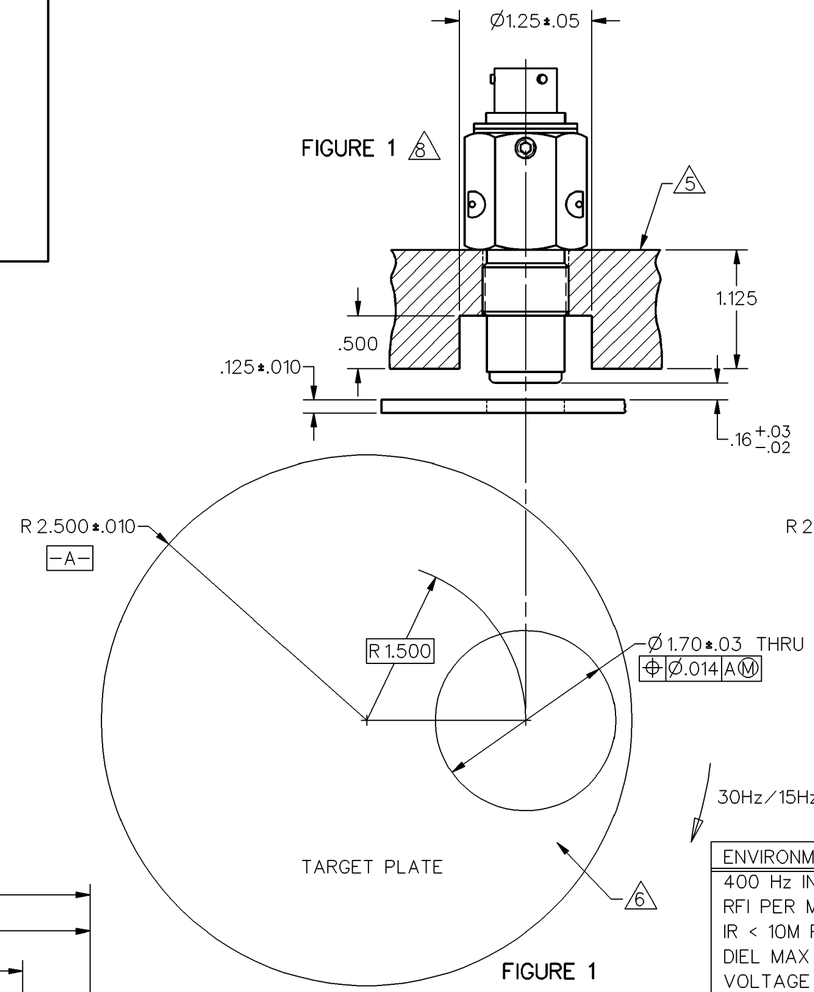

FIGURE 1

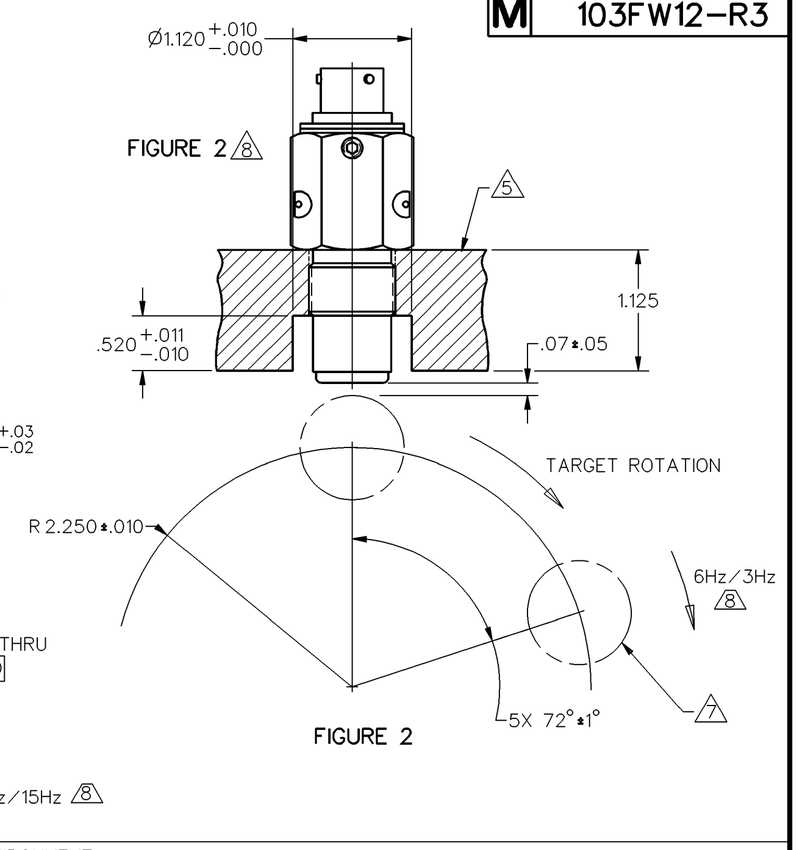

FIGURE 2

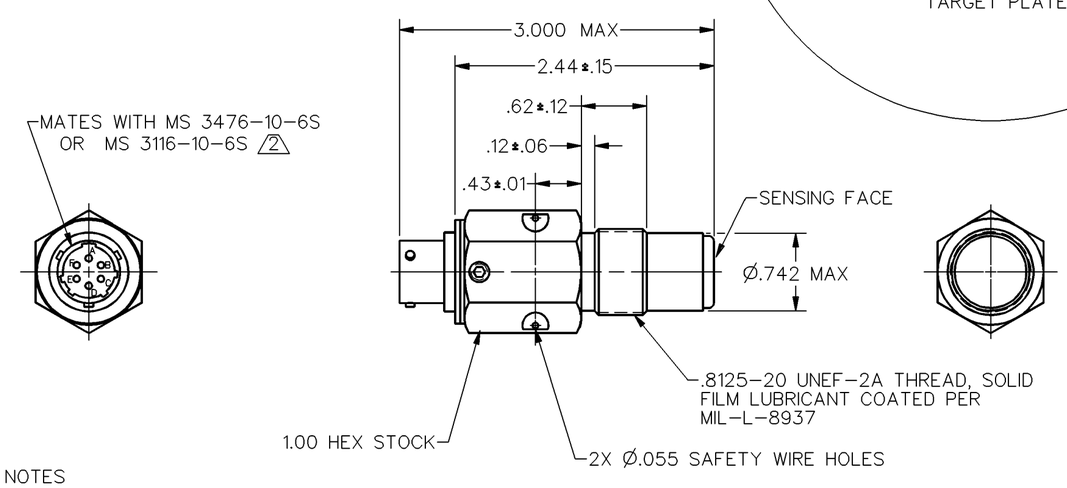

NOTES

1 – HOUSING MATERIAL: 300 SERIES STAINLESS STEEL

2 "A" SUPPLY VOLTAGE; "B" SUPPLY RETURN; "C" LOAD; "D" SHELL; "E" SHORTED TO "F"

3 – OPERATING TEMPERATURE: −40°C TO +55°C; STORAGE TEMPERATURE: −55°C TO +125°C

4 SWITCH WILL NOT BE DAMAGED IF OUTPUT TERMINAL IS MISCONNECTED TO +28 VDC OR NEG FOR 30 MIN

5 MATERIAL: 17-4PH STEEL

6 MATERIAL: 410 OR 416 CRES

7 TARGET: Ø.981±.002 X 1.300 LONG CYLINDERS, MATERIAL: CRS OR AL ALLOY 7075 T651 OR 2024 T351

8 COUNT RATE PERFORMANCE: SWITCH WILL ACCURATELY SENSE TARGETS UNDER THE FOLLOWING CONDITIONS:
FIGURE 1: 15Hz MAX FOR 3 MIN. TEST DURATION & 30Hz MAX FOR 1 MIN. TEST DURATION
FIGURE2: 3Hz MAX FOR 3 MIN. TEST DURATION & 6Hz MAX FOR 1 MIN. TEST DURATION

ENVIRONMENT:

400 Hz INTERFERENCE PER MIL-STD-704
RFI PER MIL-STD-461/462 CS01, RE02, RS02
IR < 10M PIN TO HOUSING MIL-STD-202 METHOD 302 COND B
DIEL MAX LEAK 500 A LEAD-HOUSING MIL-STD-202 METHOD 301, 500 VAC 60 Hz
VOLTAGE FLUCTUATION...
COUNT RATE 1800 TARGETS/MIN FOR 1 MIN & 900 TARGETS/MIN FOR 3 MIN AT ROOM TEMP
THERMAL SHOCK MIL-STD-810 METHOD 503.2 PROCEDURE 1
HUMIDITY MIL-STD-810 METHOD 502.2 PROCEDURE 1 NON-OPERATING
SALT SPRAY MIL-STD-810 METHOD 509.2 NON-OPERATING
SAND AND DUST MIL-STD-810 METHOD 510.2 NON-OPERATING
FUNGUS MIL-STD-810 METHOD 508.3 NON-OPERATING
EXPLOSIVE ATMOSPHERE MIL-STD-810 METHOD 511.2 PROCEDURE 1
SHOCK MIL-STD-810 METHOD 514.3 CAT 4. 1500G ACCELERATION 1-2mS SAWTOOTH
VIBRATION MIL-STD-810 METHOD 514.3 CAT 4
THERMAL CYCLE SCREENING: TWO CYCLES −40°C TO +85°C

ELECTRICAL PARAMETERS

INPUT
VOLTAGE: 18-30 VDC, MIL-STD-704
CURRENT: 25 MA MAX

OUTPUT
TYPE: CURRENT SINK, SPNO, LOAD SHORT PROTECTED 4
LEAKAGE CURRENT: 10 MICROAMPS MAX
STEADY STATE RATINGS:
RESISTIVE: 100 MILLIAMPS MAX
INDUCTIVE: 100 MILLIAMPS MAX
LOAD VOLTAGE: 30 VDC MAX
SATURATION VOLTAGE: 2.0 VDC MAX

MASTER REDUCED
ANSI Y14.5M-1982 APPLIES

THIRD ANGLE PROJECTION
SCALE FULL
DO NOT SCALE PRINT

UNLESS OTHERWISE SPECIFIED TOLERANCES ARE

ONE PLACE	(.0)	±.030
TWO PLACES	(.00)	±.015
THREE PLACES	(.000)	±.005
ANGLES		±

WEIGHT

THIS DRAWING COVERS A PROPRIETARY ITEM AND IS THE PROPERTY OF MICRO SWITCH. A DIVISION OF HONEYWELL. THIS DRAWING IS NOT TO BE COPIED OR USED WITHOUT THE APPROVAL OF MICRO SWITCH.

MICRO SWITCH a Honeywell Division
FED. MFG. CODE 91929

INTEGRAL PROXIMITY SWITCH

CATALOG LISTING
103FW12-R3

DRAWING NUMBER 103FW12-R3
PAGE 1 OF 1
RELEASE NO. DR-4093
REPLACES
ISSUE 9
M

REVISIONS

A	PR19398	JAK 14FEB92	
B	UO 72209	GLH 14OCT92	
C	CO 74678	JJO 21OCT93	CMH 19JUN08
D	CO 77584	JJO 2FEB94	
E	CO 79595	JAK 19JAN95	
F	207274	TSM 27 JAN 03	
G	0007742	TCC-AP 2 SEP 04	
H	0040940	VSY 19JUN08	

DRAWN KFU 26OCT90 CHECK GLH 15NOV90 CHECK CHECK

RASTER