Candelabra Screw

6 SERIES

- **CANDELABRA SCREW NON-GROUNDED AND GROUNDED LAMPHOLDERS**
- **SOLDER LUG TERMINALS OR PRINTED CIRCUIT BOARD TERMINALS**
- **NICKEL PLATED BRASS SHELL**
- **MAXIMUM RATING: 75 WATTS, 125 VOLTS**

Overview

The 6 Series lampholders are constructed with a nickel-plated brass shell and tinned solder lug or printed circuit board terminals. Lampholders can be supplied as either non-grounded or grounded units. Non-grounded units are supplied with two tinned solder lugs or two printed circuit board terminals. Grounded units with one solder lug terminal, unless otherwise noted. Many bracket and mounting options are available. Lampholders are designed for use with candelabra screw lamps.

Specifications

Shell: *nickel plated brass. Non-grounded units may be customized with an insulating gray vulcanized fiber sleeve.*

Terminals:
Solder lug: *solder coated steel, 0.250" length x 0.020" thick, 60°-90° apart with two wire holes 3/32" in diameter. Non-grounded units are supplied with two terminals. Grounded units are supplied with one terminal.*

Printed circuit board terminals: *electro tinned steel.*

Mounting:
Brackets: *0.025" to 0.032" zinc plated steel. Custom brackets and plating types are available.*

Maximum rating: *75 Watts, 125 Volts.*

Non-grounded unit **06-07**

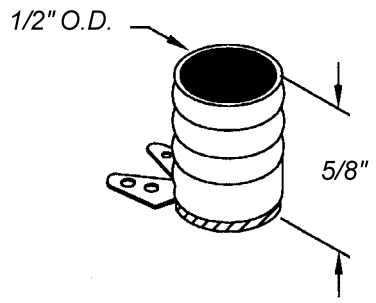

For grounded unit: 06-07-1.

Non-grounded only. **06-35**

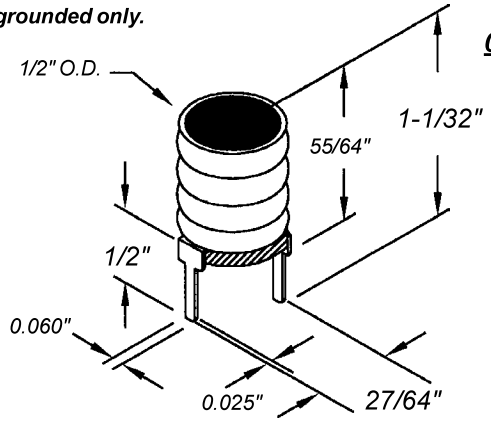

Designed for mounting on a printed circuit board with two 0.070" holes spaced 0.375" apart.

Can't find it here? We have many more standard and custom solutions

The items in this product sheets are only a small respresentative sample of the complete VCC product line. We manufacture many additional products which are not shown in this product sheet due to space contraints.

Custom products can also be designed uniquely for you by our Technical Support Professionals. Starting from your ideas and specifications, we work wiht your personnel to develop timely and cost effective solutions for your minature lighting needs.

VCC Technical Support Services are provided without charge and may include designs, prototypes and pre-production samples.

For further information, phone Customer Service at 800.522.5546.

VCC™

LEECRAFT®
A VCC PRODUCT LINE

Candelabra Screw

6 SERIES

Maximum Rating: 75 Watts, 125 Volts
Non-Grounded or Grounded

Nickel Plated Brass Shell
Solder Lug Terminals or
Printed Circuit Board Terminals

06-01

For grounded unit: 06-01-1.

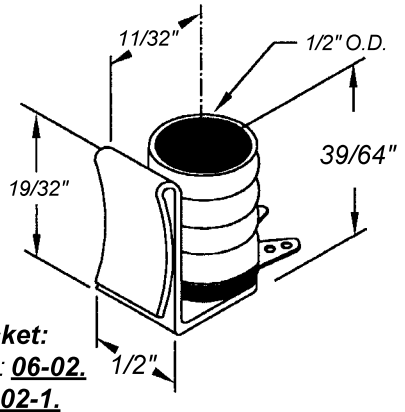

For reversed bracket:
*Non-grounded unit: **06-02.***
*Grounded unit: **06-02-1.***

06-06

For grounded unit: 06-06-1.

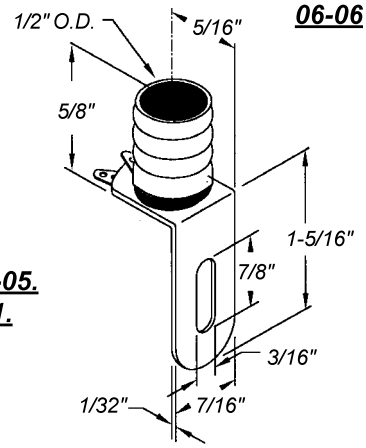

For reversed bracket:
*Non-grounded unit: **06-05.***
*Grounded unit: **06-05-1.***

06-08

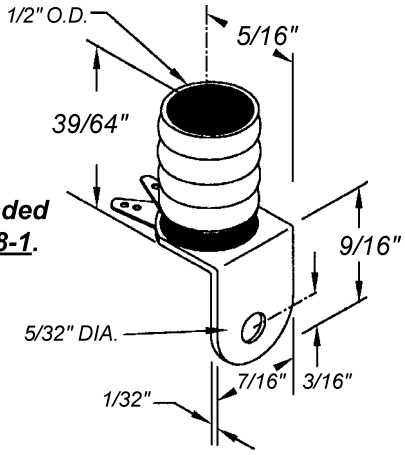

For grounded unit: 06-08-1.

06-13

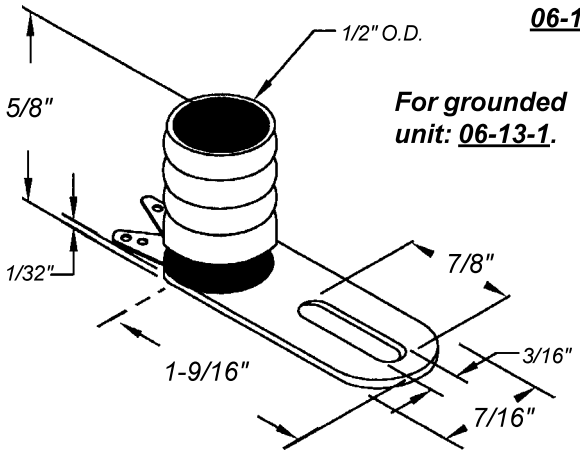

For grounded unit: 06-13-1.

06-20

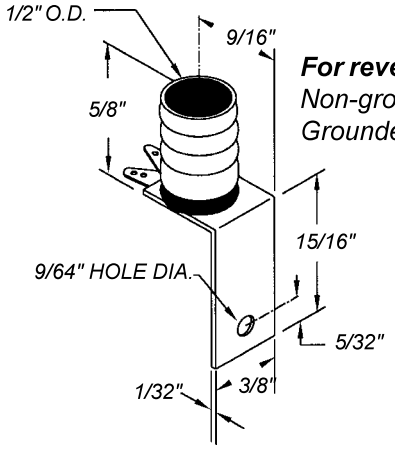

For reversed bracket:
*Non-grounded unit: **06-19.***
*Grounded unit: **06-19-1.***

For grounded unit: 06-20-1.

06-87

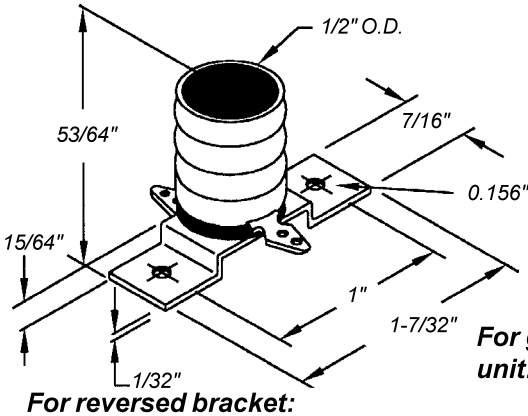

For grounded unit: 06-87-1.

For reversed bracket:
*Non-grounded unit: **06-86.** Grounded unit: **06-86-1.***